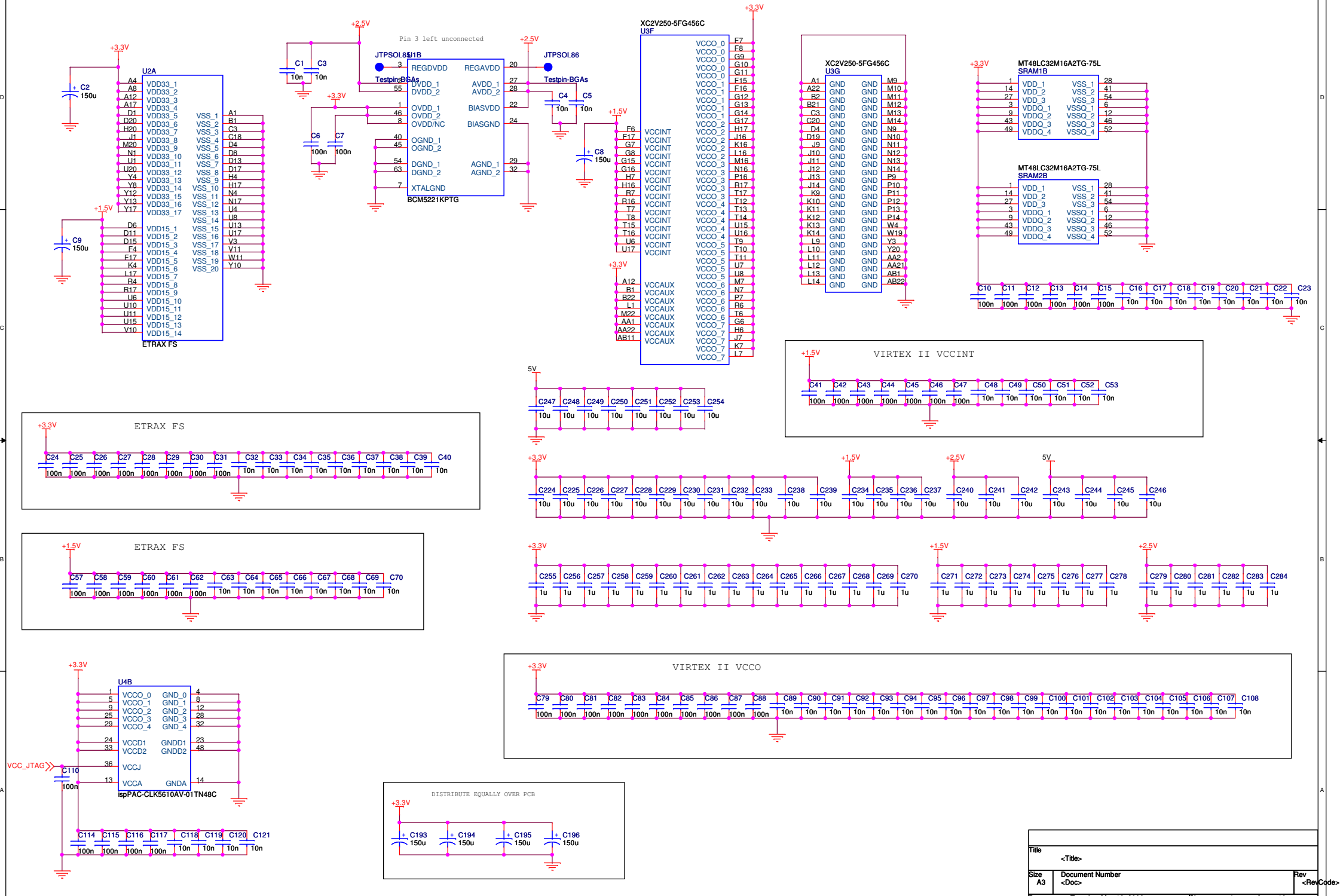
U2A
ETRAX FS
U1B
BCM5221KPTG
Pin 3 left unconnected
JTPSOL85
JTPSOL86
Testpin-BGAs
U3F
XC2V250-5FG456C
U3G
XC2V250-5FG456C
SRAM1B
MT48LC32M16A2TG-75L
SRAM2B
MT48LC32M16A2TG-75L
VIRTEX II VCCINT
ETRAX FS
ETRAX FS
U4B
ispPAC-CLK5610AV-01TN48C
VCC_JTAG
VIRTEX II VCCO
DISTRIBUTE EQUALLY OVER PCB
Title
<Title>
Size
A3
Document Number
<Doc>
Rev
<RevCode>
Date:
Tuesday, May 16, 2006
Sheet
1
of
16

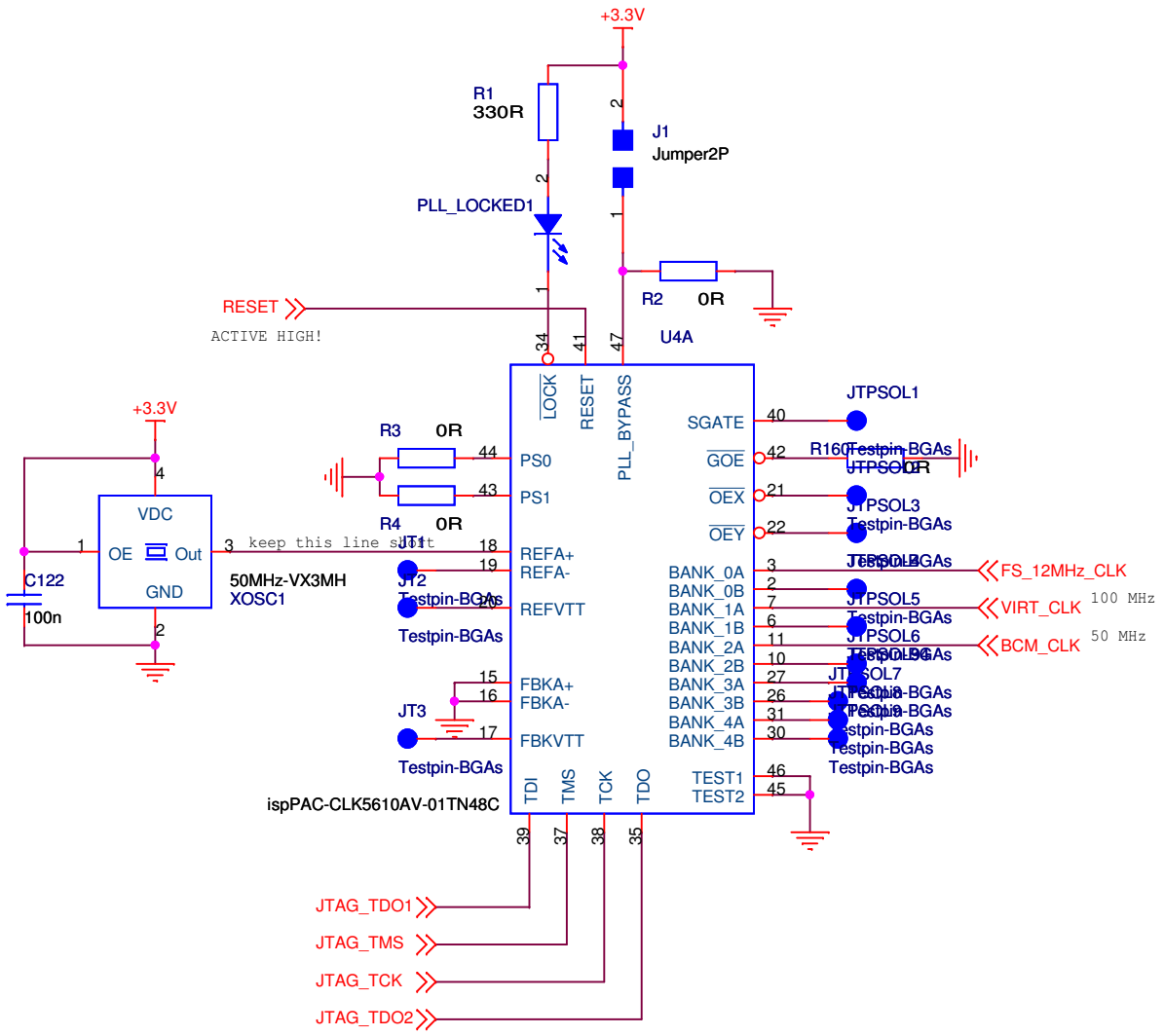

Title <Title>		
Size A4	Document Number <Doc>	Rev <RevCo
Date: Thursday, May 11, 2006	Sheet 2 of 16	

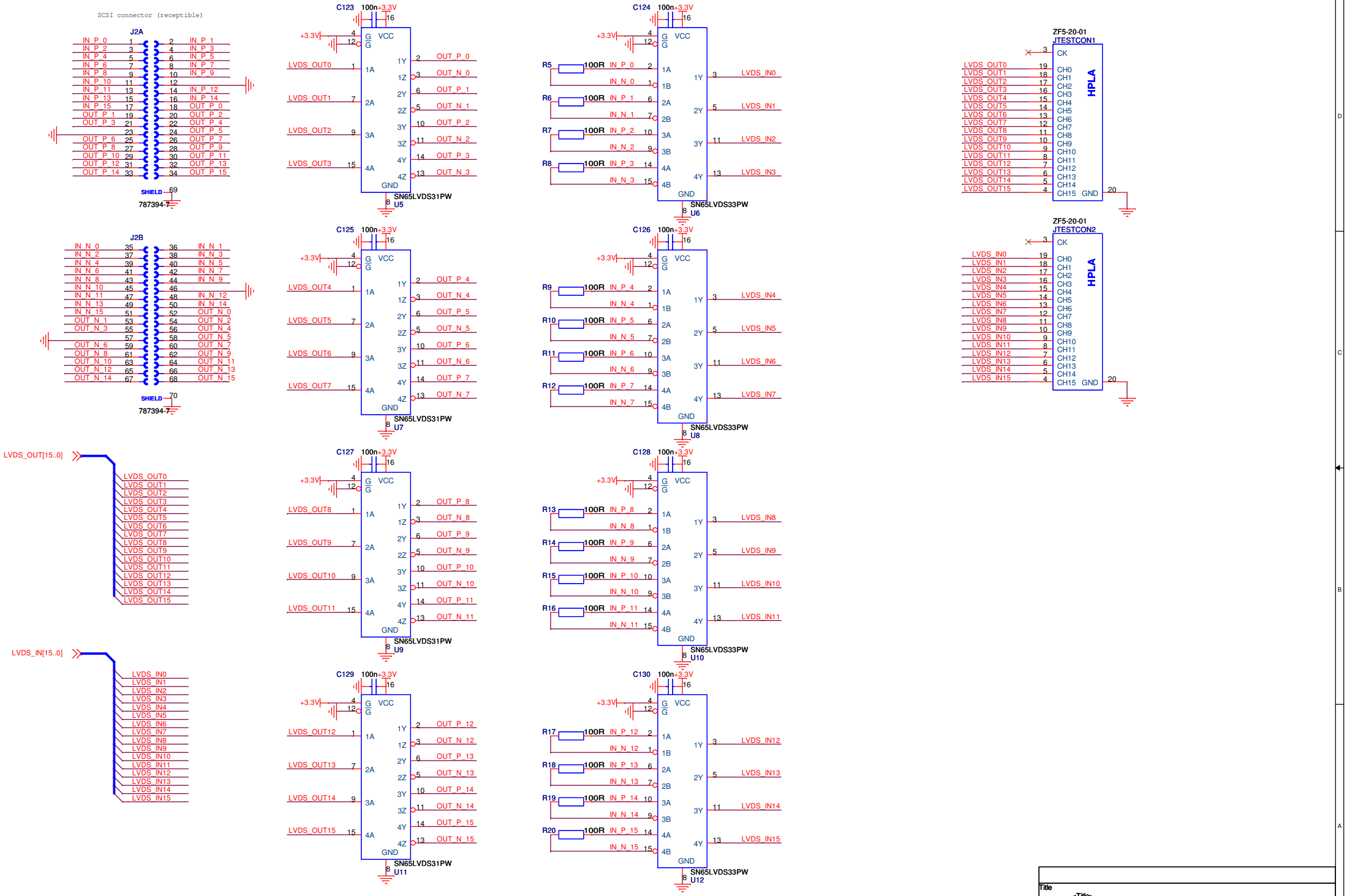
SCSI connector (receptible)
J2A
IN_P_0 IN_P_1
IN_P_2 IN_P_3
IN_P_4 IN_P_5
IN_P_6 IN_P_7
IN_P_8 IN_P_9
IN_P_10
IN_P_11 IN_P_12
IN_P_13 IN_P_14
IN_P_15 OUT_P_0
OUT_P_1 OUT_P_2
OUT_P_3 OUT_P_4
OUT_P_5
OUT_P_6 OUT_P_7
OUT_P_8 OUT_P_9
OUT_P_10 OUT_P_11
OUT_P_12 OUT_P_13
OUT_P_14 OUT_P_15
SHIELD
787394-7
J2B
IN_N_0 IN_N_1
IN_N_2 IN_N_3
IN_N_4 IN_N_5
IN_N_6 IN_N_7
IN_N_8 IN_N_9
IN_N_10
IN_N_11 IN_N_12
IN_N_13 IN_N_14
IN_N_15 OUT_N_0
OUT_N_1 OUT_N_2
OUT_N_3 OUT_N_4
OUT_N_5
OUT_N_6 OUT_N_7
OUT_N_8 OUT_N_9
OUT_N_10 OUT_N_11
OUT_N_12 OUT_N_13
OUT_N_14 OUT_N_15
SHIELD
787394-7
LVDS_OUT[15..0]
LVDS_IN[15..0]
C123 100n +3.3V
C124 100n +3.3V
C125 100n +3.3V
C126 100n +3.3V
C127 100n +3.3V
C128 100n +3.3V
C129 100n +3.3V
C130 100n +3.3V
SN65LVDS31PW U5
SN65LVDS33PW U6
SN65LVDS31PW U7
SN65LVDS33PW U8
SN65LVDS31PW U9
SN65LVDS33PW U10
SN65LVDS31PW U11
SN65LVDS33PW U12
R5 100R
R6 100R
R7 100R
R8 100R
R9 100R
R10 100R
R11 100R
R12 100R
R13 100R
R14 100R
R15 100R
R16 100R
R17 100R
R18 100R
R19 100R
R20 100R
ZF5-20-01
JTESTCON1
JTESTCON2
HPLA
CK
CH0 CH1 CH2 CH3 CH4 CH5 CH6 CH7 CH8 CH9 CH10 CH11 CH12 CH13 CH14 CH15
GND
Title
<Title>
Size A3
Document Number
<Doc>
Rev
<RevCode>
Date: Thursday, May 04, 2006
Sheet 3 of 16

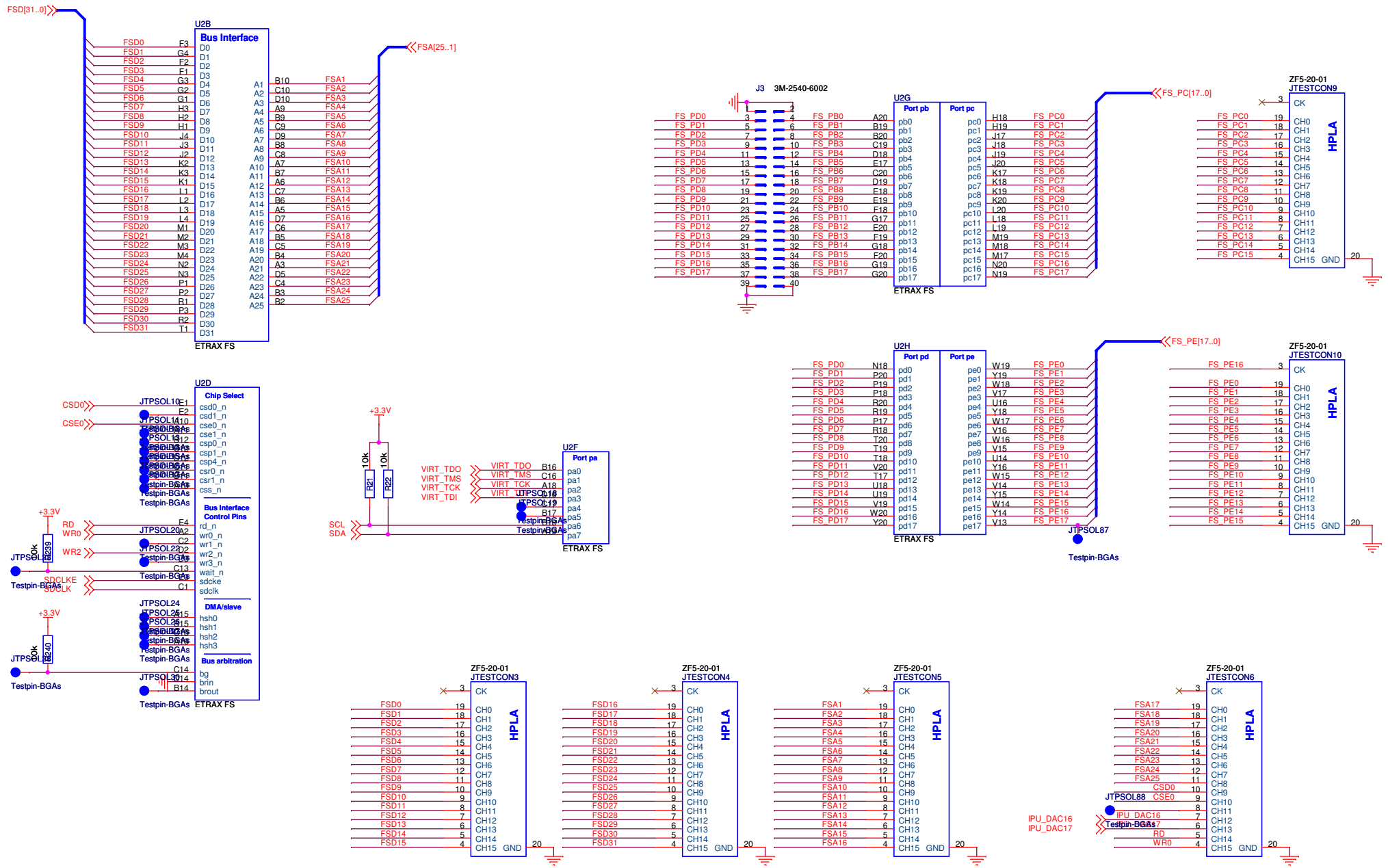

Title	<Title>
Size A3	Document Number <Doc>
Rev	<RevCode>
Date: Thursday, May 11, 2006	Sheet 4 of 16

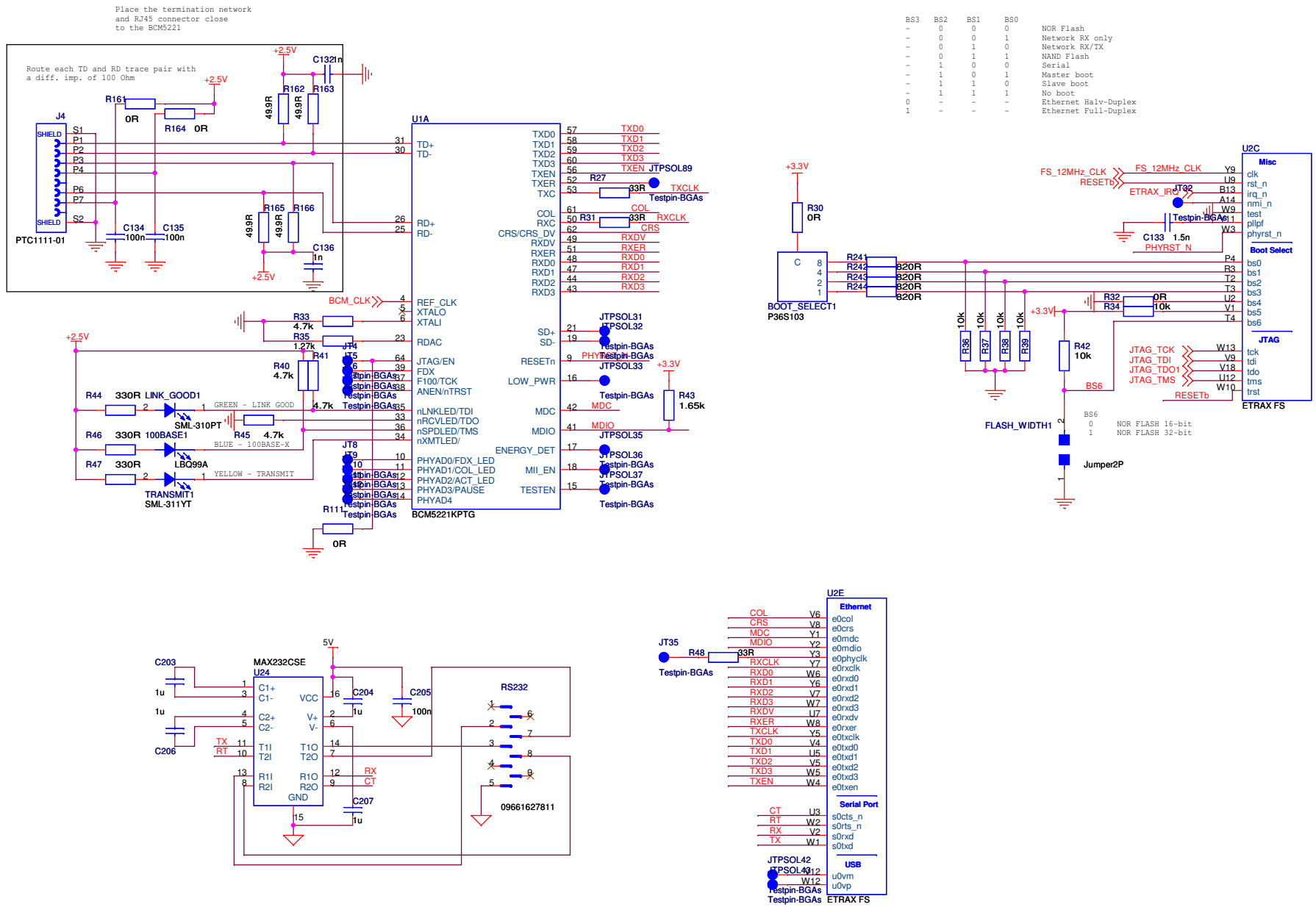

Title	<Title>
Size A3	Document Number <Doc>
Rev	<RevCode>
Date: Thursday, May 11, 2006	Sheet 5 of 16

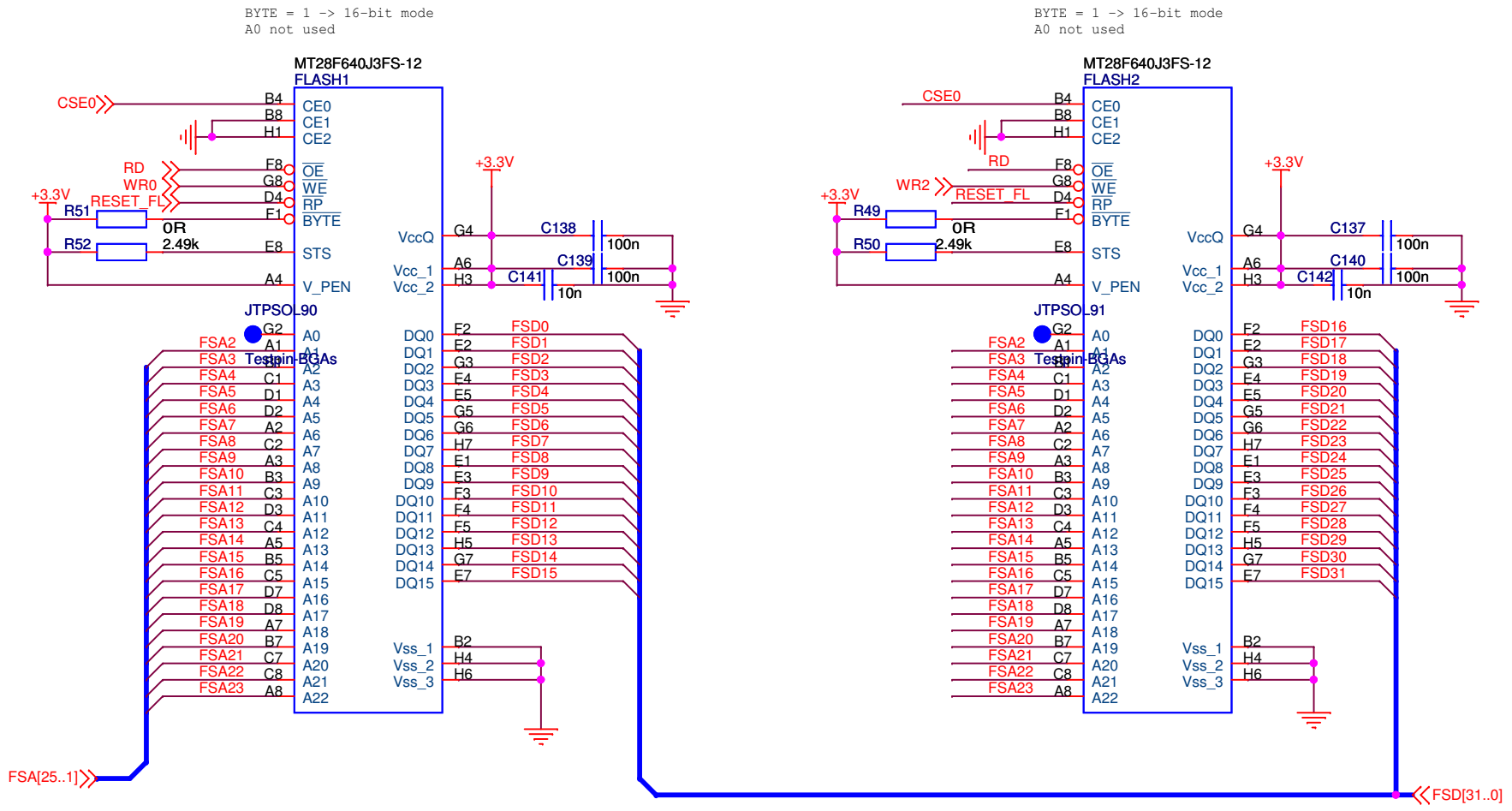

Title <Title>		
Size A4	Document Number <Doc>	Rev <RevCo
Date: Thursday, May 11, 2006	Sheet 6 of 16	

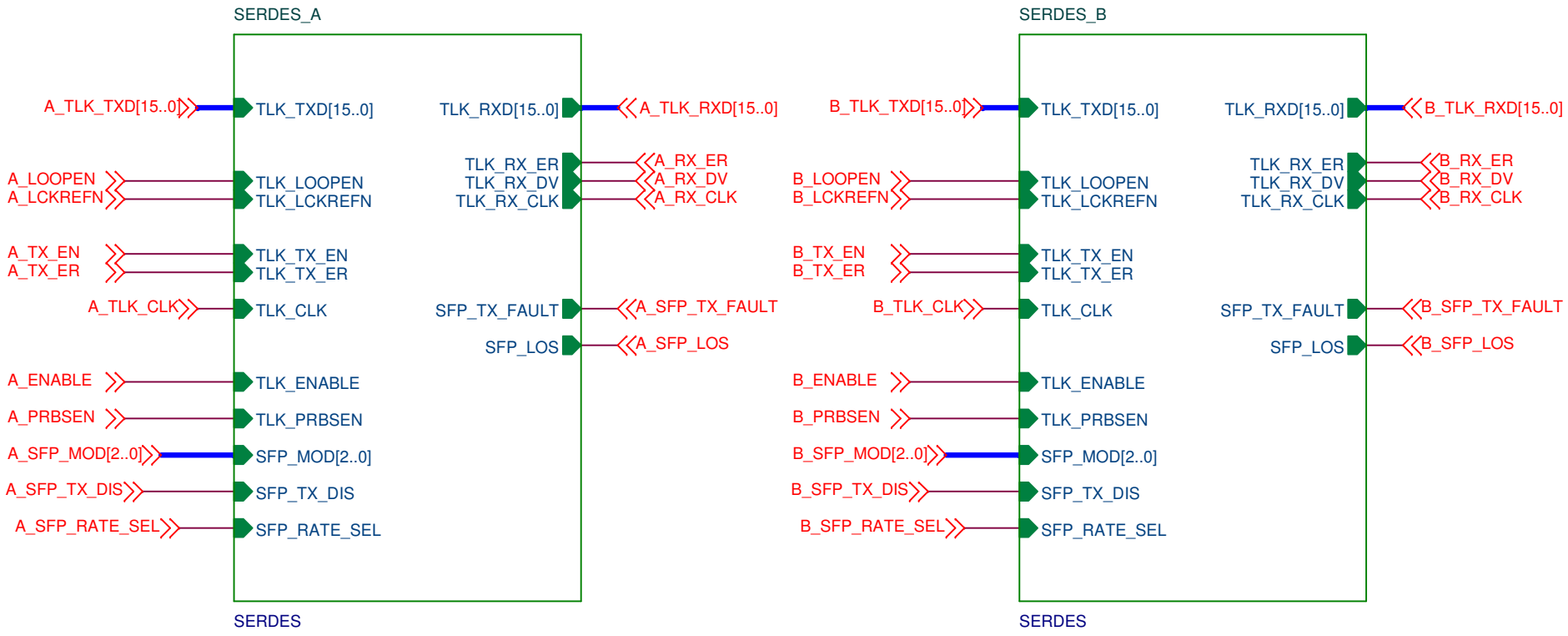

Title <Title>		
Size A	Document Number <Doc>	Rev <RevCode>
Date: Friday, March 31, 2006	Sheet 7 of 16	

IPU_LINK: CONNECTOR

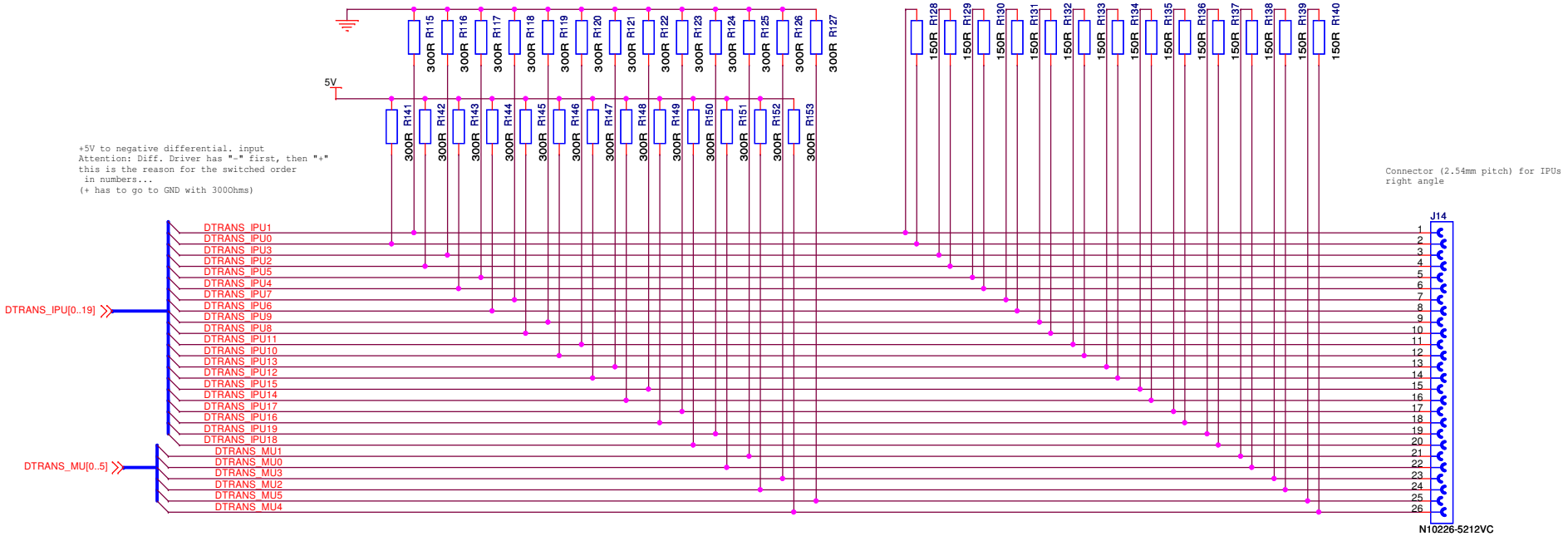

Title	<Title>	
Size A3	Document Number <Doc>	Rev <RevCode>
Date: Tuesday, May 02, 2006	Sheet 8 of 16	

IPU_LINK: TRANSCEIVER

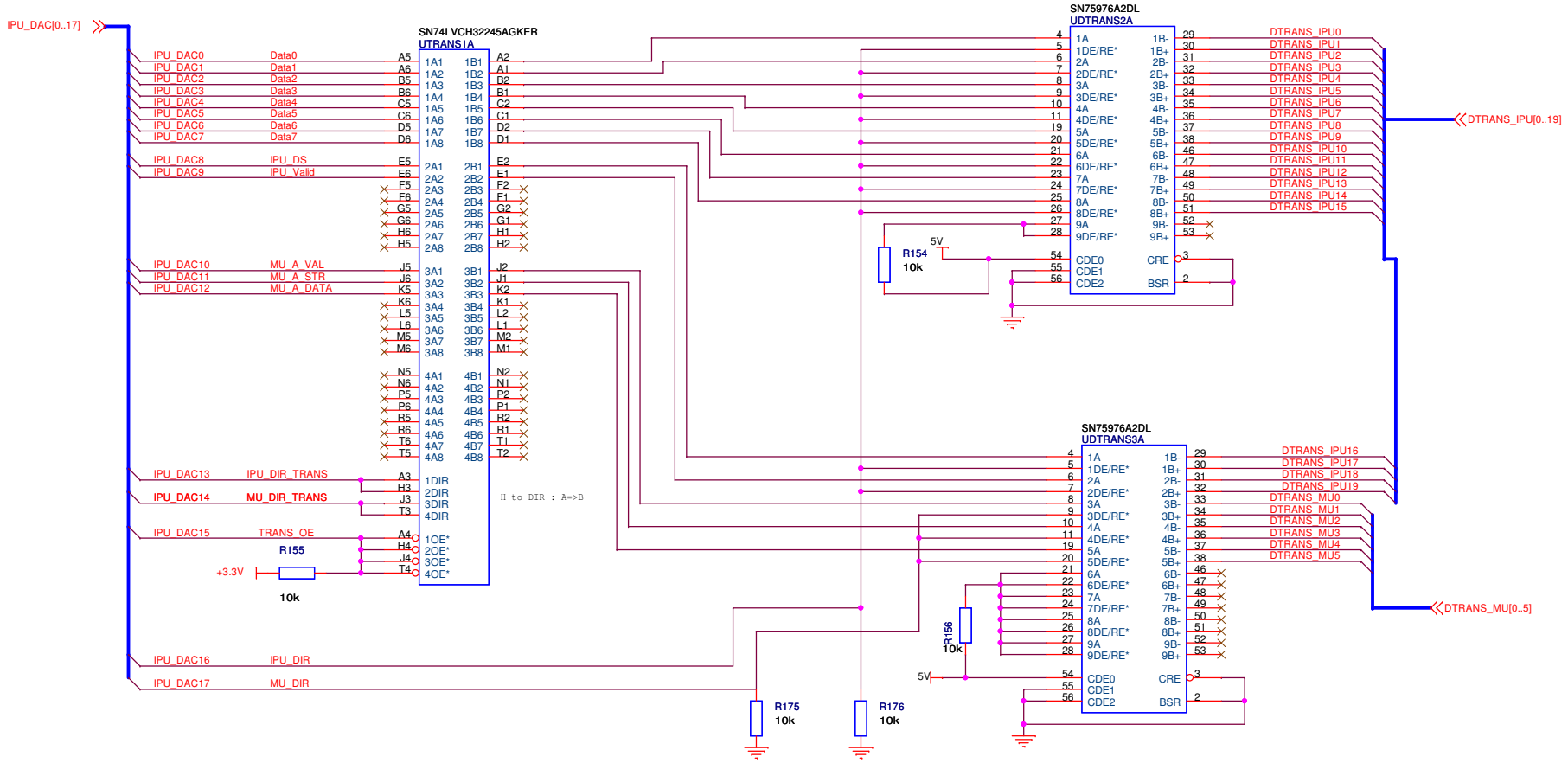

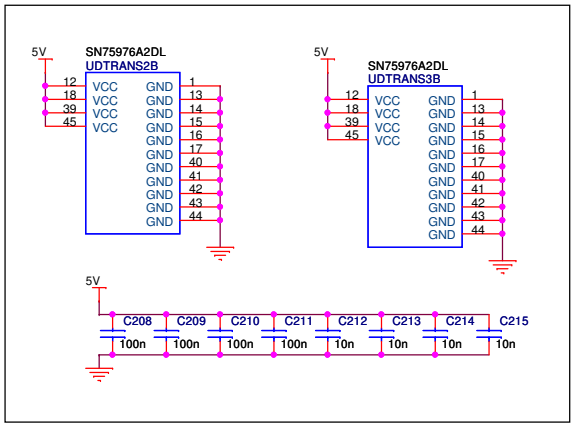

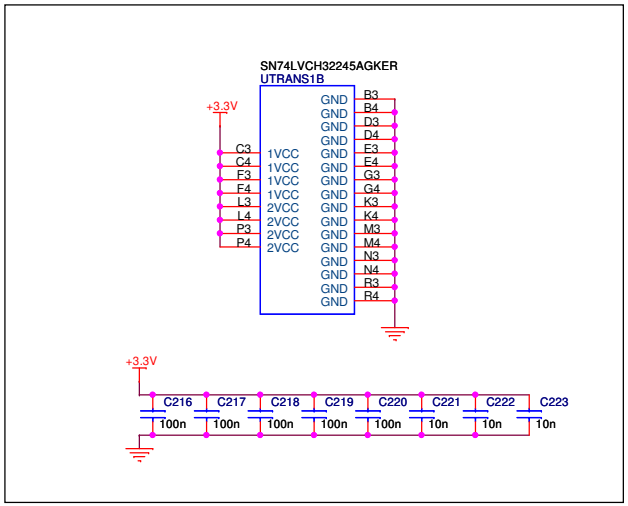

Title	<Title>		
Size A3	Document Number <Doc>		Rev <RevCode>
Date: Wednesday, May 03, 2006	Sheet 9 of 16		

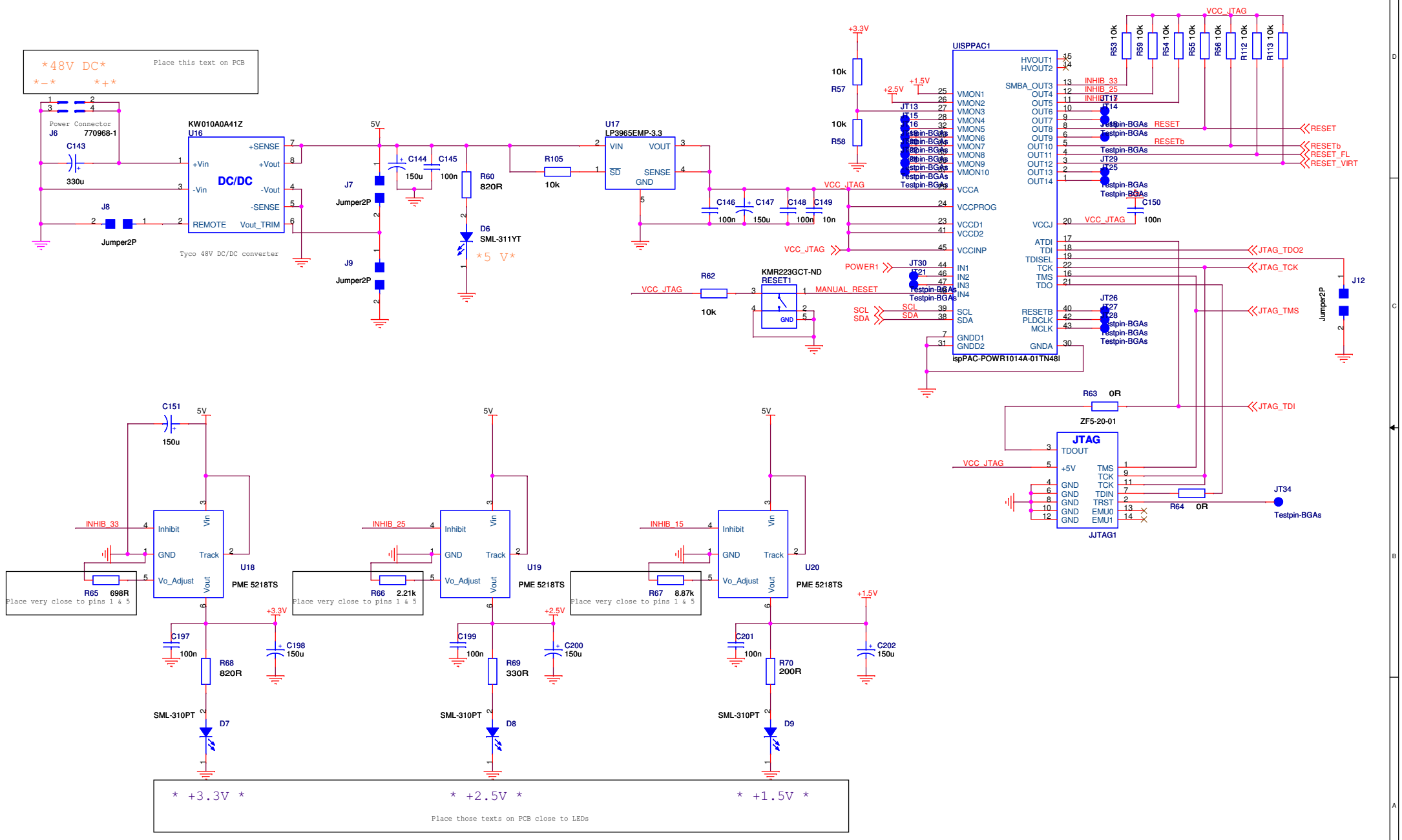

Title	<Title>	
Size A3	Document Number <Doc>	Rev <RevCode>
Date: Thursday, May 11, 2006	Sheet 10 of 16	

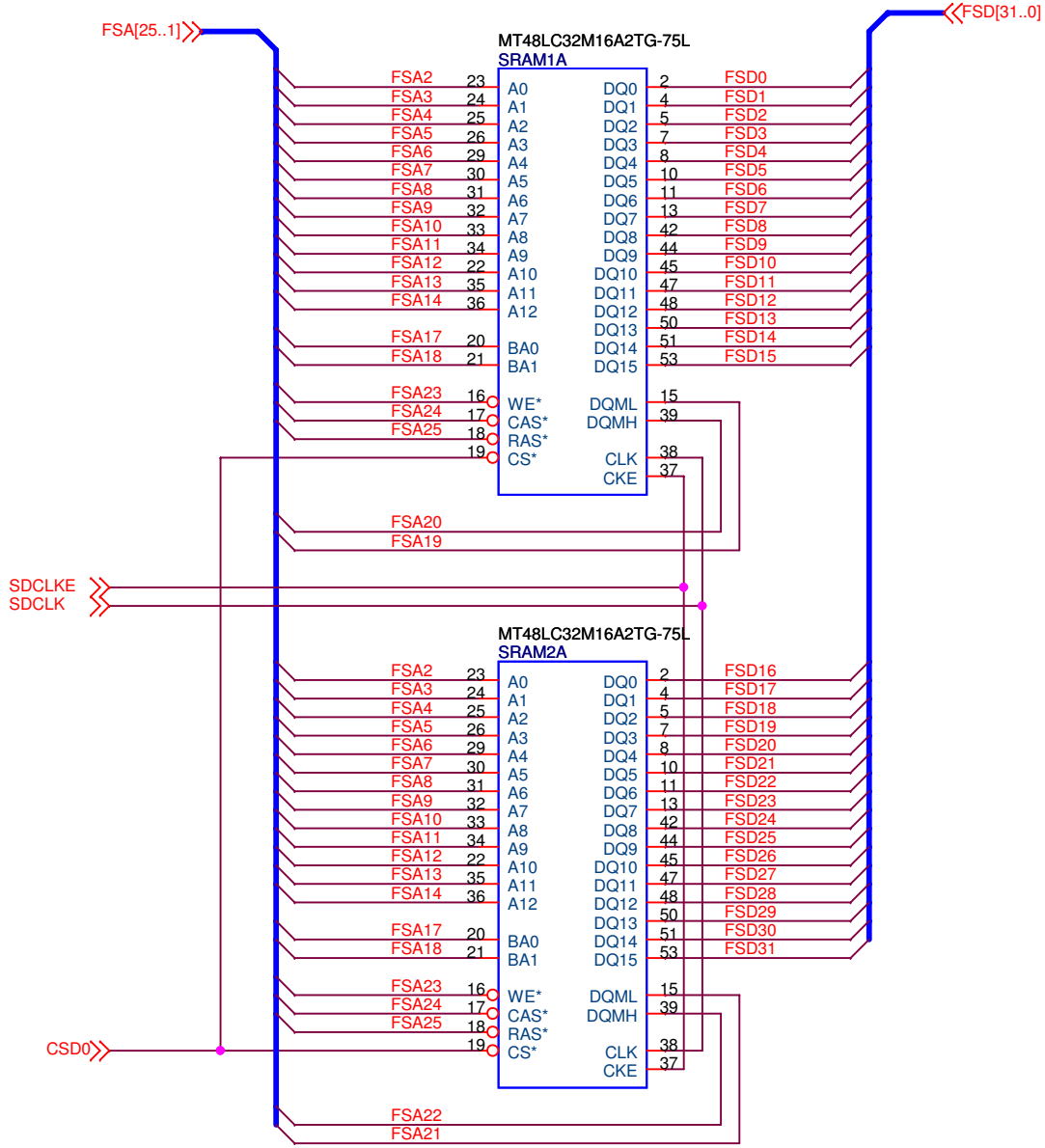

Title <Title>		
Size A4	Document Number <Doc>	Rev <RevCo
Date: Friday, May 05, 2006	Sheet 11 of 16	

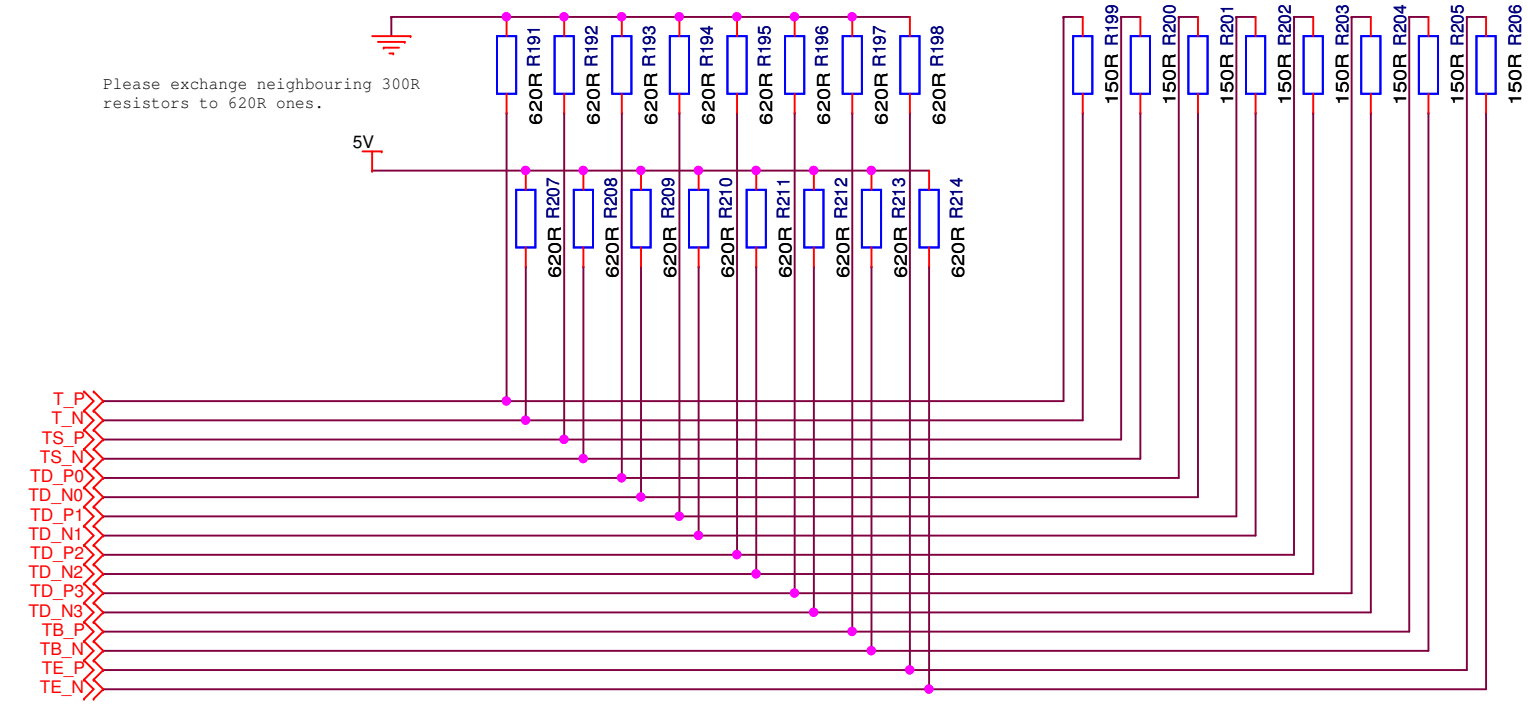

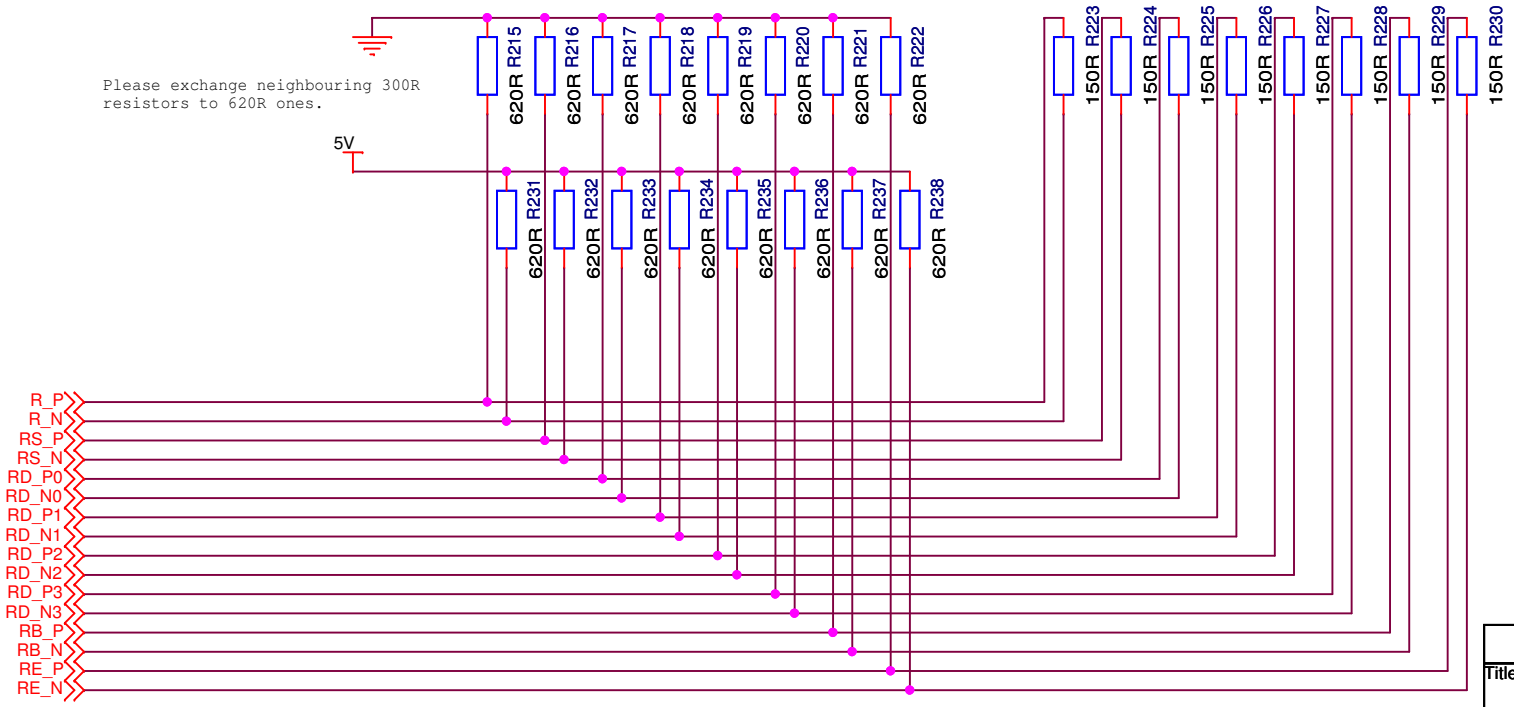

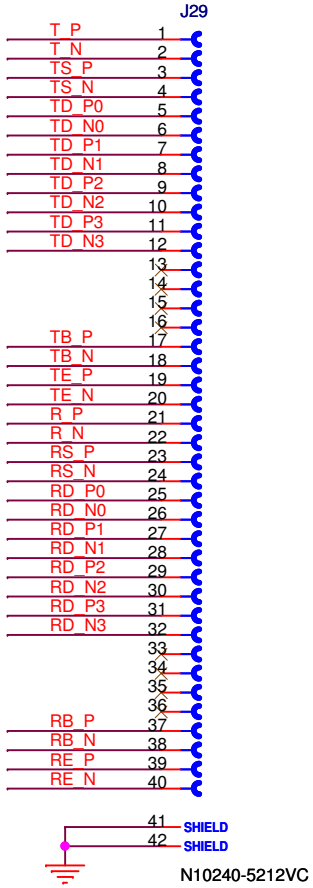

Trigger-Bus Connector, 40 pins Mini D Ribbon,

Title <Title>		
Size A4	Document Number <Doc>	Rev <RevCo
Date: Wednesday, May 17, 2006	Sheet 12 of 16	

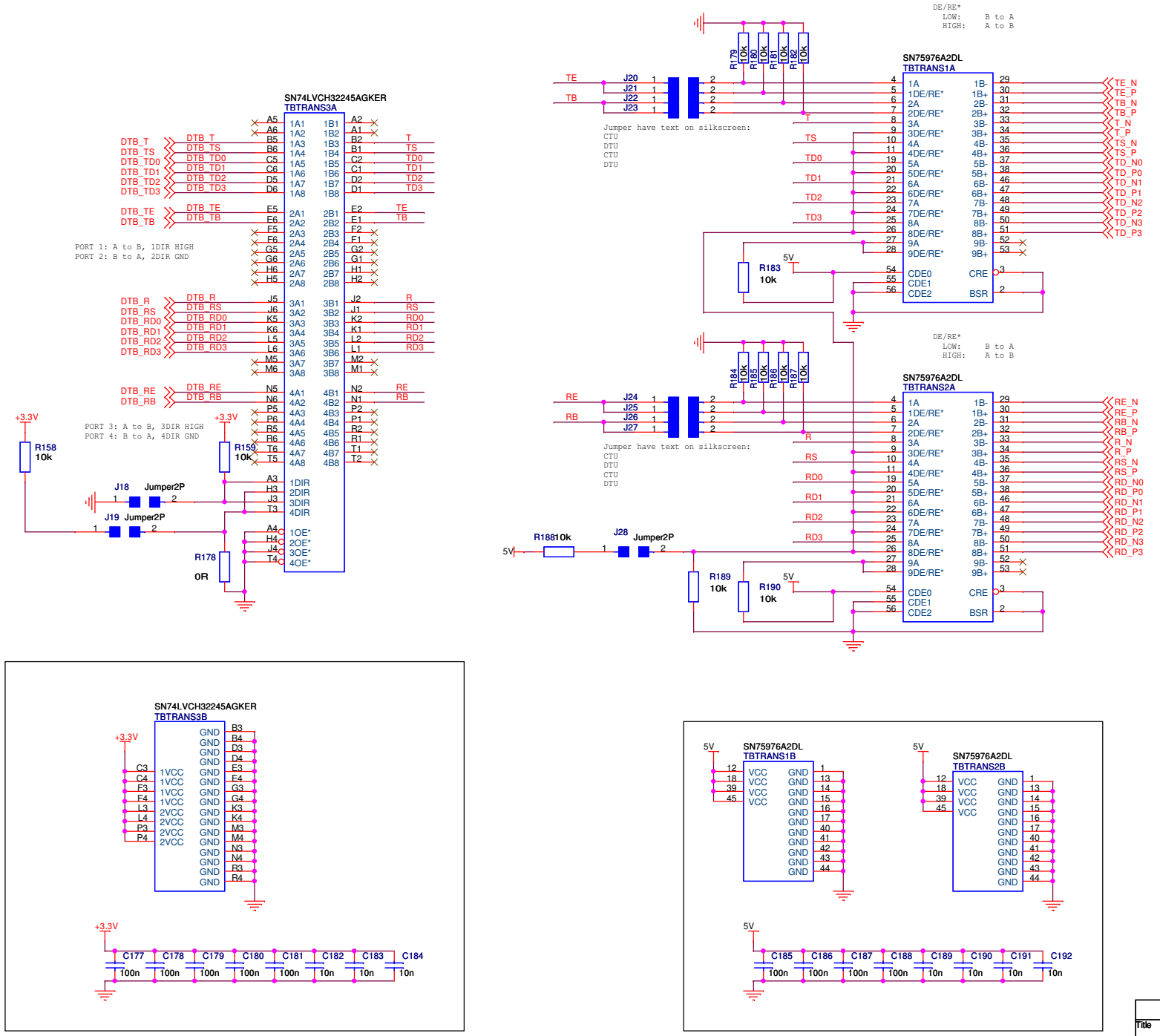

Title	<Title>
Size A3	Document Number <Doc>
Rev	<RevCode>
Date: Wednesday, May 03, 2006	Sheet 13 of 16

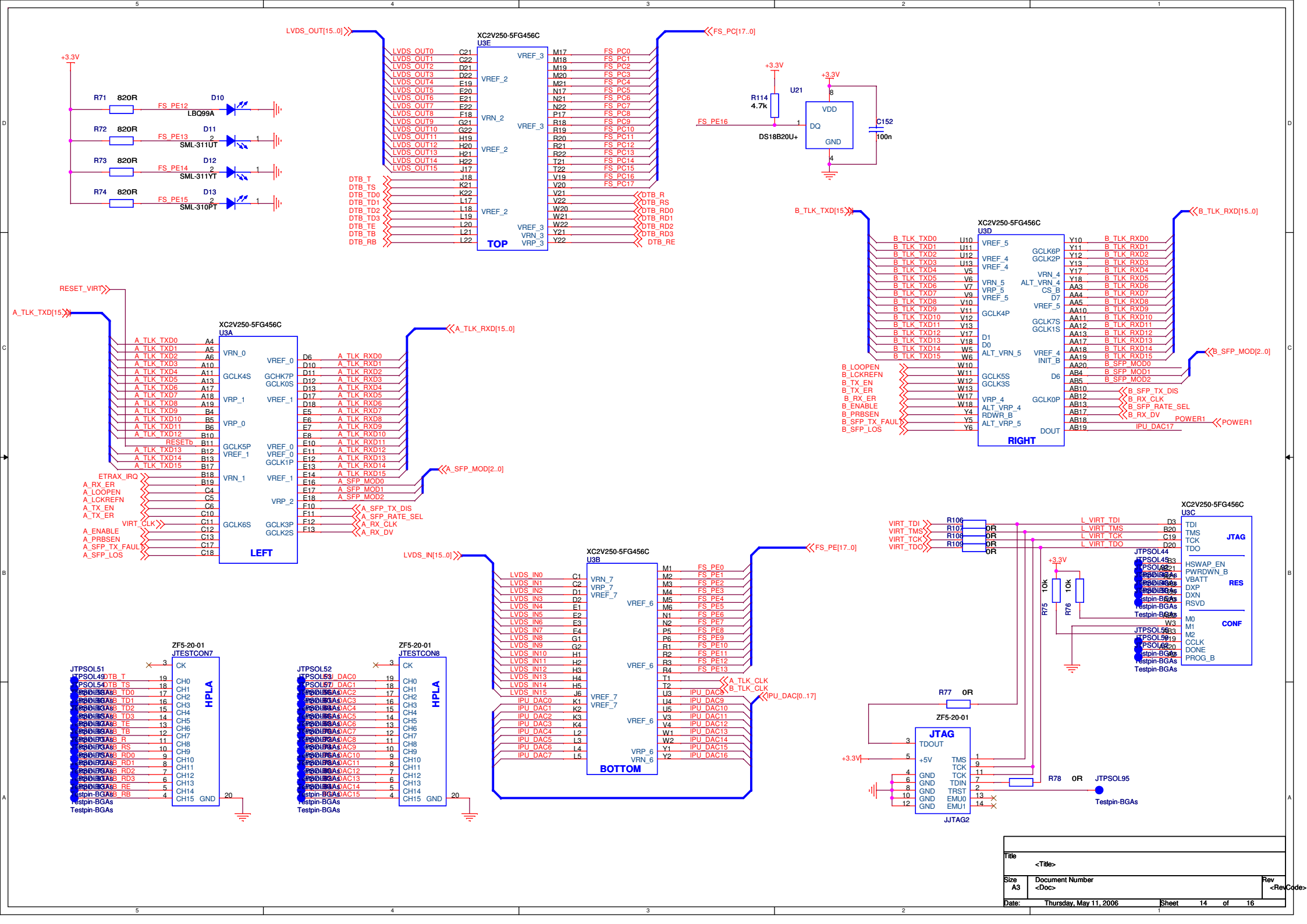
XC2V250-5FG456C
U3E
TOP
LVDS_OUT[15..0]
FS_PC[17..0]
DTB_T
DTB_TS
DTB_TD0
DTB_TD1
DTB_TD2
DTB_TD3
DTB_TE
DTB_TB
DTB_RB
DTB_R
DTB_RS
DTB_RD0
DTB_RD1
DTB_RD2
DTB_RD3
DTB_RE
+3.3V
R71 820R
R72 820R
R73 820R
R74 820R
D10
D11
D12
D13
LBQ99A
SML-311UT
SML-311YT
SML-310PT
FS_PE12
FS_PE13
FS_PE14
FS_PE15
R114
4.7k
U21
DS18DB20U+
VDD
DQ
GND
C152
100n
FS_PE16
XC2V250-5FG456C
U3D
RIGHT
B_TLK_TXD[15..0]
B_TLK_RXD[15..0]
B_SFP_MOD[2..0]
B_LOOPEN
B_LCKREFN
B_TX_EN
B_TX_ER
B_RX_ER
B_ENABLE
B_PRBSEN
B_SFP_TX_FAUL
B_SFP_LOS
B_SFP_TX_DIS
B_RX_CLK
B_SFP_RATE_SEL
B_RX_DV
POWER1
IPU_DAC17
XC2V250-5FG456C
U3A
LEFT
RESET_VIRT
A_TLK_TXD[15..0]
A_TLK_RXD[15..0]
A_SFP_MOD[2..0]
ETRAX_IRQ
A_RX_ER
A_LOOPEN
A_LCKREFN
A_TX_EN
A_TX_ER
VIRT_CLK
A_ENABLE
A_PRBSEN
A_SFP_TX_FAUL
A_SFP_LOS
A_SFP_TX_DIS
A_SFP_RATE_SEL
A_RX_CLK
A_RX_DV
XC2V250-5FG456C
U3B
BOTTOM
LVDS_IN[15..0]
FS_PE[17..0]
IPU_DAC[0..17]
A_TLK_CLK
B_TLK_CLK
XC2V250-5FG456C
U3C
JTAG
RES
CONF
TDI
TMS
TCK
TDO
HSWAP_EN
PWRDWN_B
VBATT
DXP
DXN
RSVD
M0
M1
M2
CCLK
DONE
PROG_B
VIRT_TDI
VIRT_TMS
VIRT_TCK
VIRT_TDO
R106
R107 0R
R108 0R
R109 0R
R75 10k
R76 10k
R77 0R
R78 0R
JTPSOL95
Testpin-BGAs
ZF5-20-01
JTESTCON7
JTESTCON8
HPLA
JTPSOL51
JTPSOL52
JTAG
JJTAG2
TDOUT
+5V
GND
TDIN
TRST
EMU0
EMU1
Title
<Title>
Size
A3
Document Number
<Doc>
Rev
<RevCode>
Date:
Thursday, May 11, 2006
Sheet
14
of
16

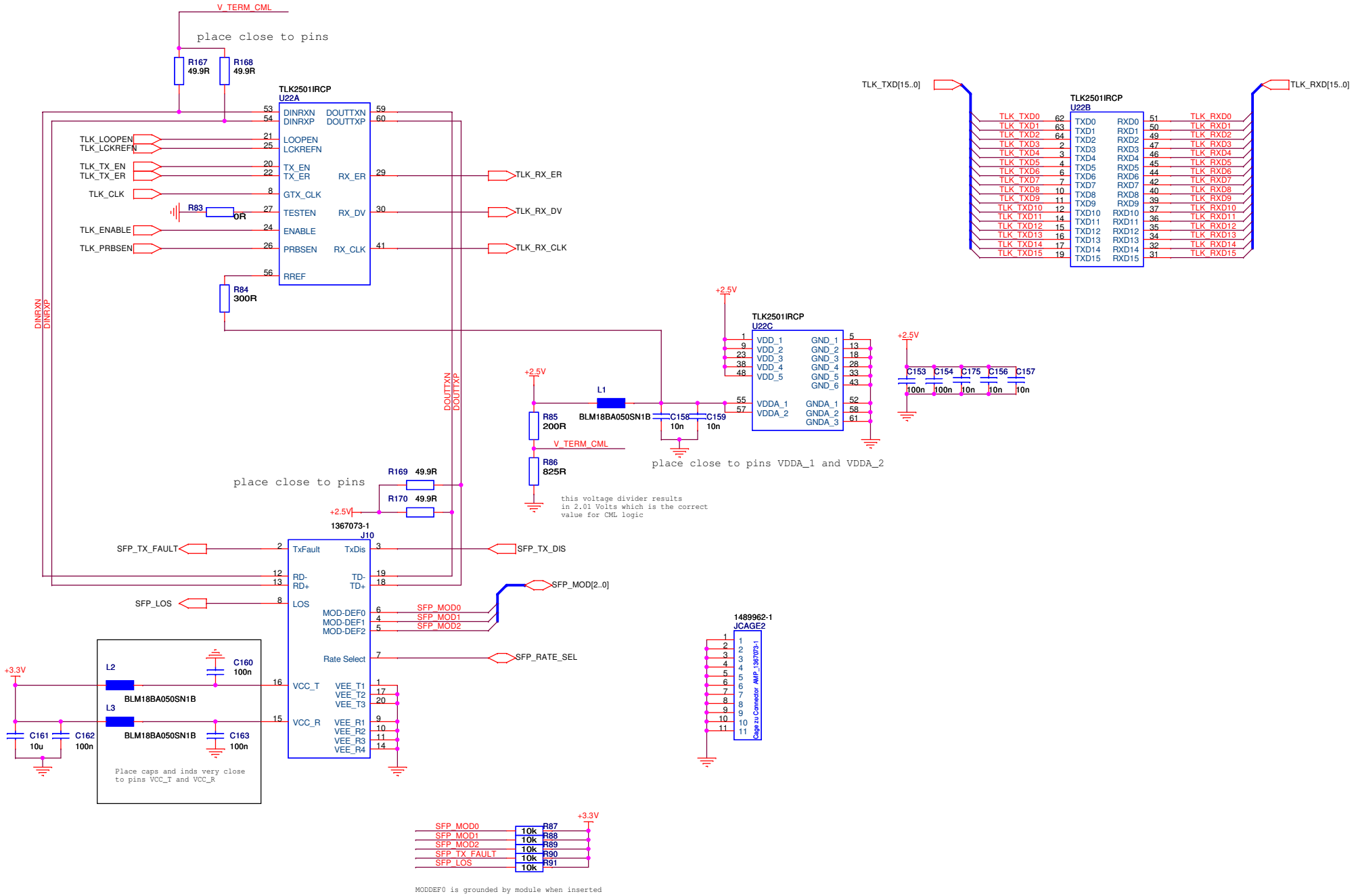

Title	<Title>		
Size A3	Document Number <Doc>		Rev <RevCode>
Date: Friday, May 05, 2006	Sheet 15 of 16		

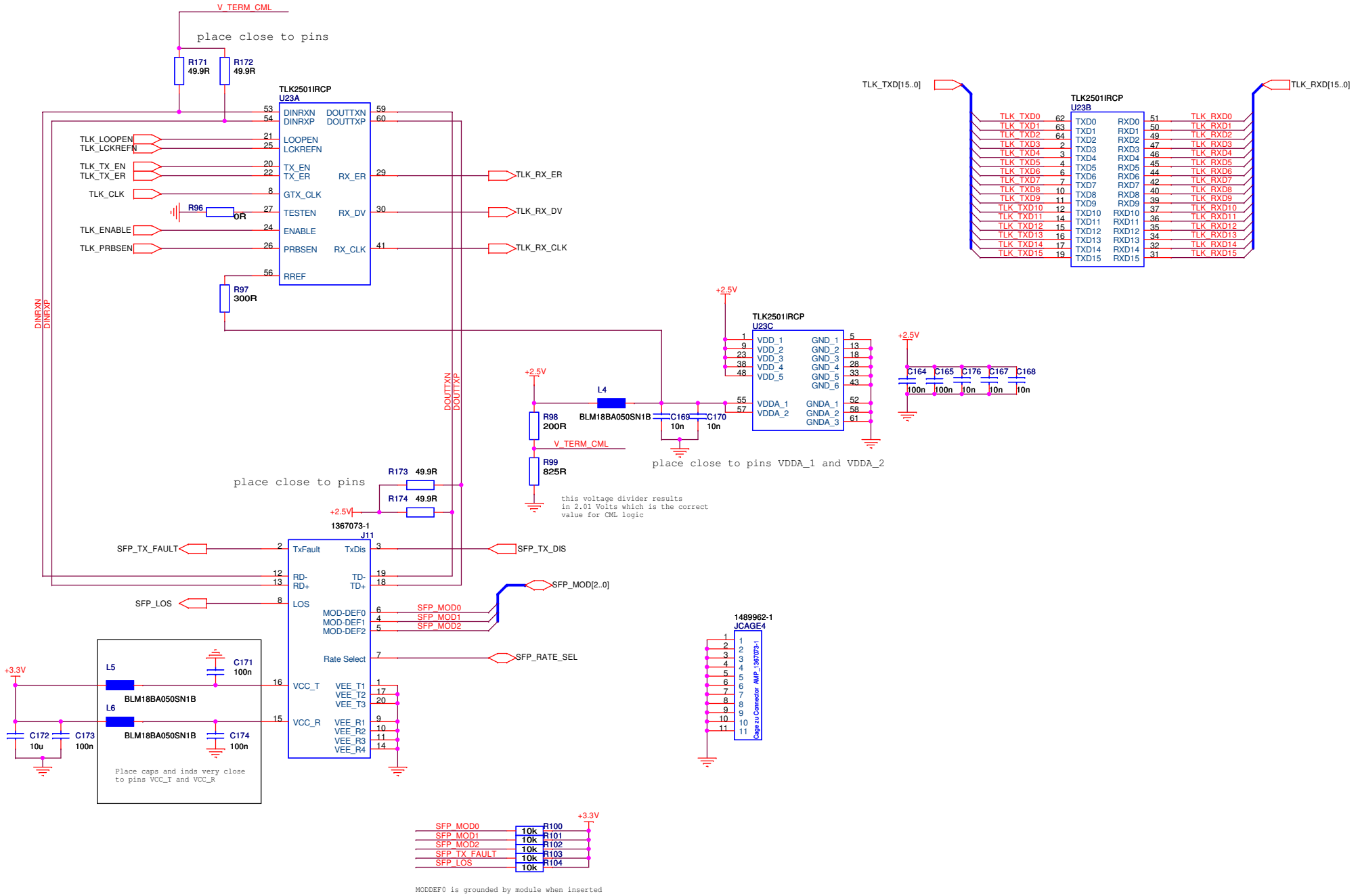

Title	<Title>		
Size A3	Document Number <Doc>		Rev <RevCode>
Date: Friday, May 05, 2006	Sheet 16 of 16		