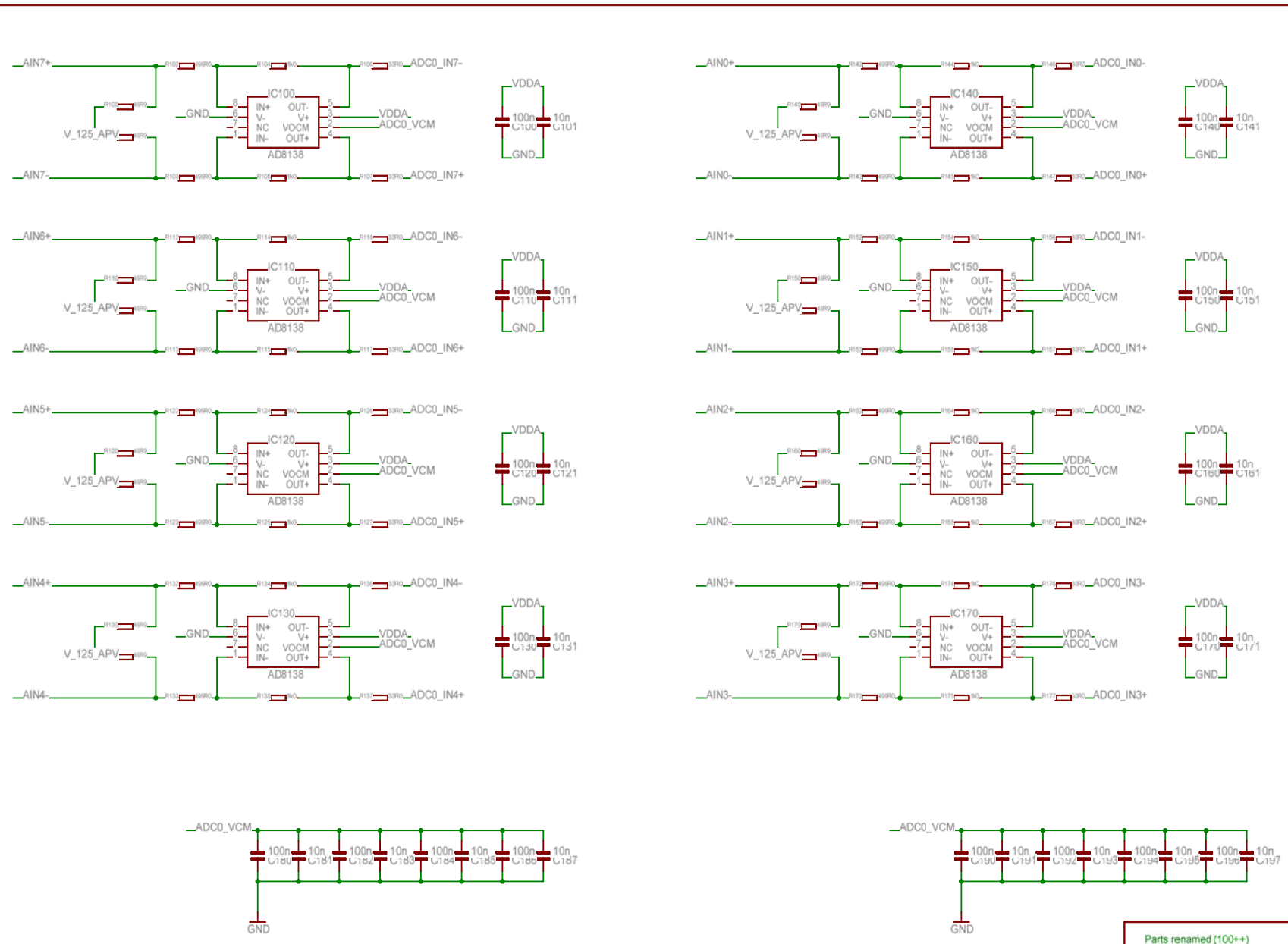

Parts renamed (100++)

Values checked

TITLE: ETNA_8L_final_D

Document Number:

REV:

Date: 26.01.2009 15:33:21

Sheet: 1/16

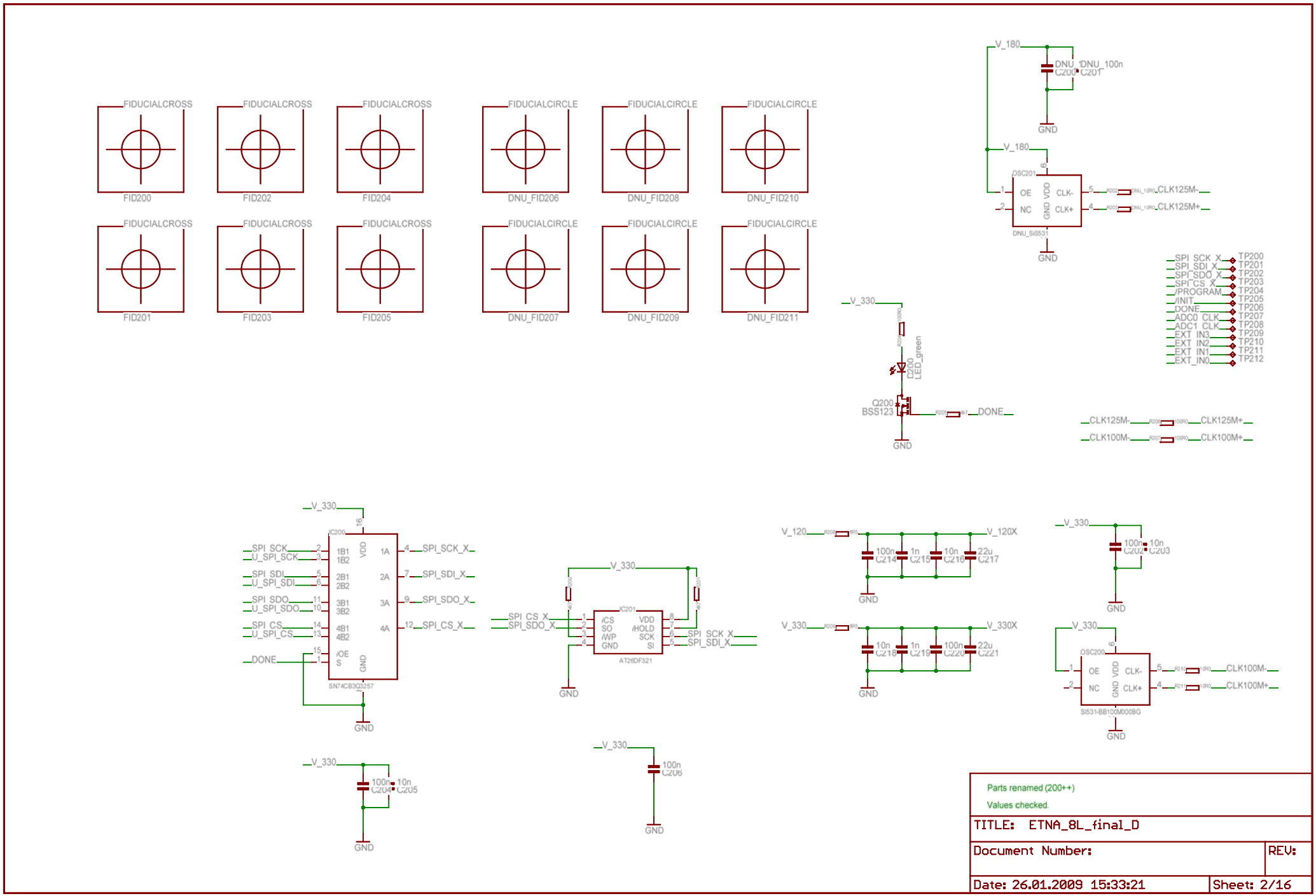

Parts renamed (200++)

Values checked.

TITLE: ETNA_8L_final_D

Document Number:

REV:

Date: 26.01.2009 15:33:21

Sheet: 2/16

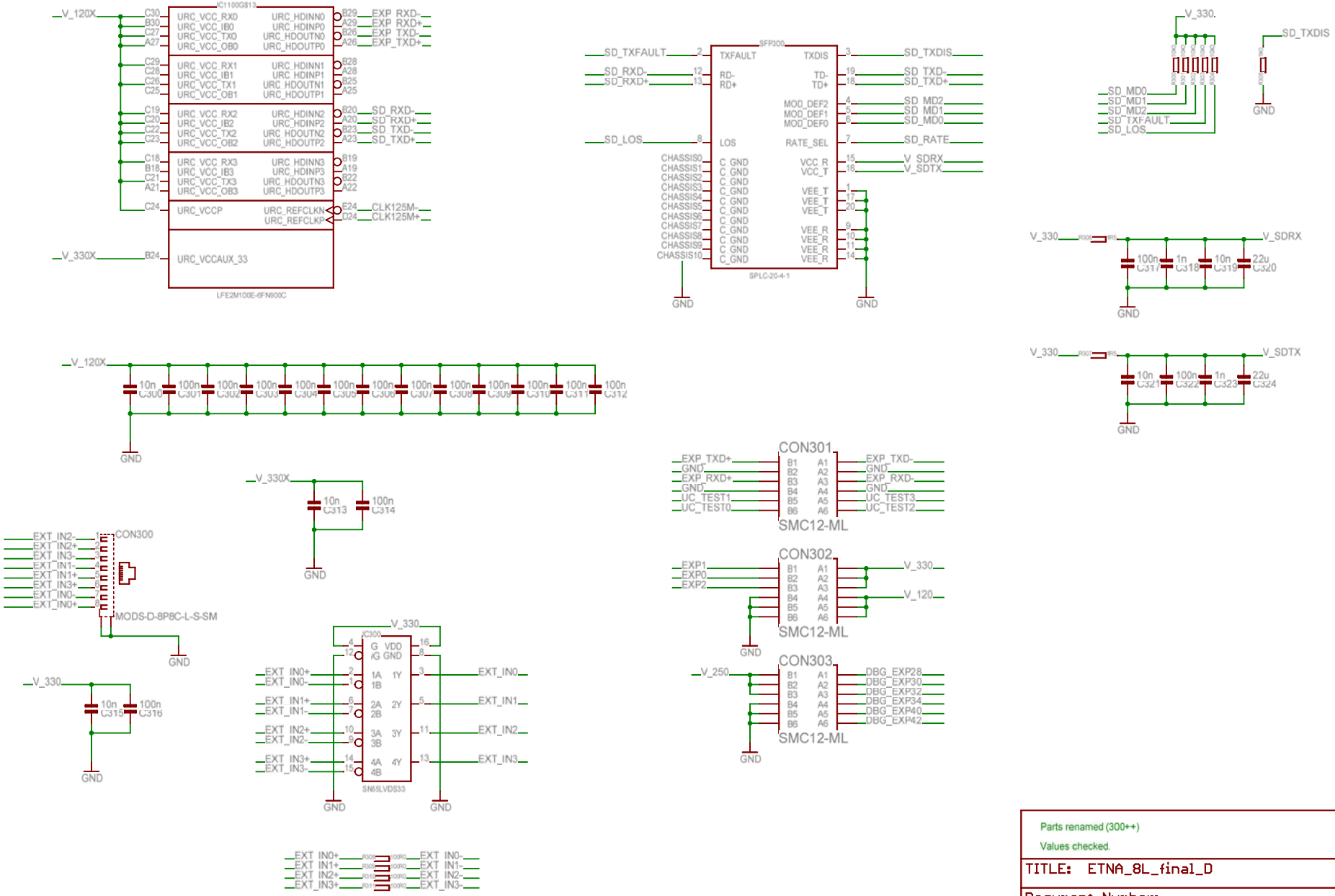

Parts renamed (300++)

Values checked.

TITLE: ETNA_8L_final_D	
Document Number:	REV:
Date: 26.01.2009 15:33:21	Sheet: 3/16

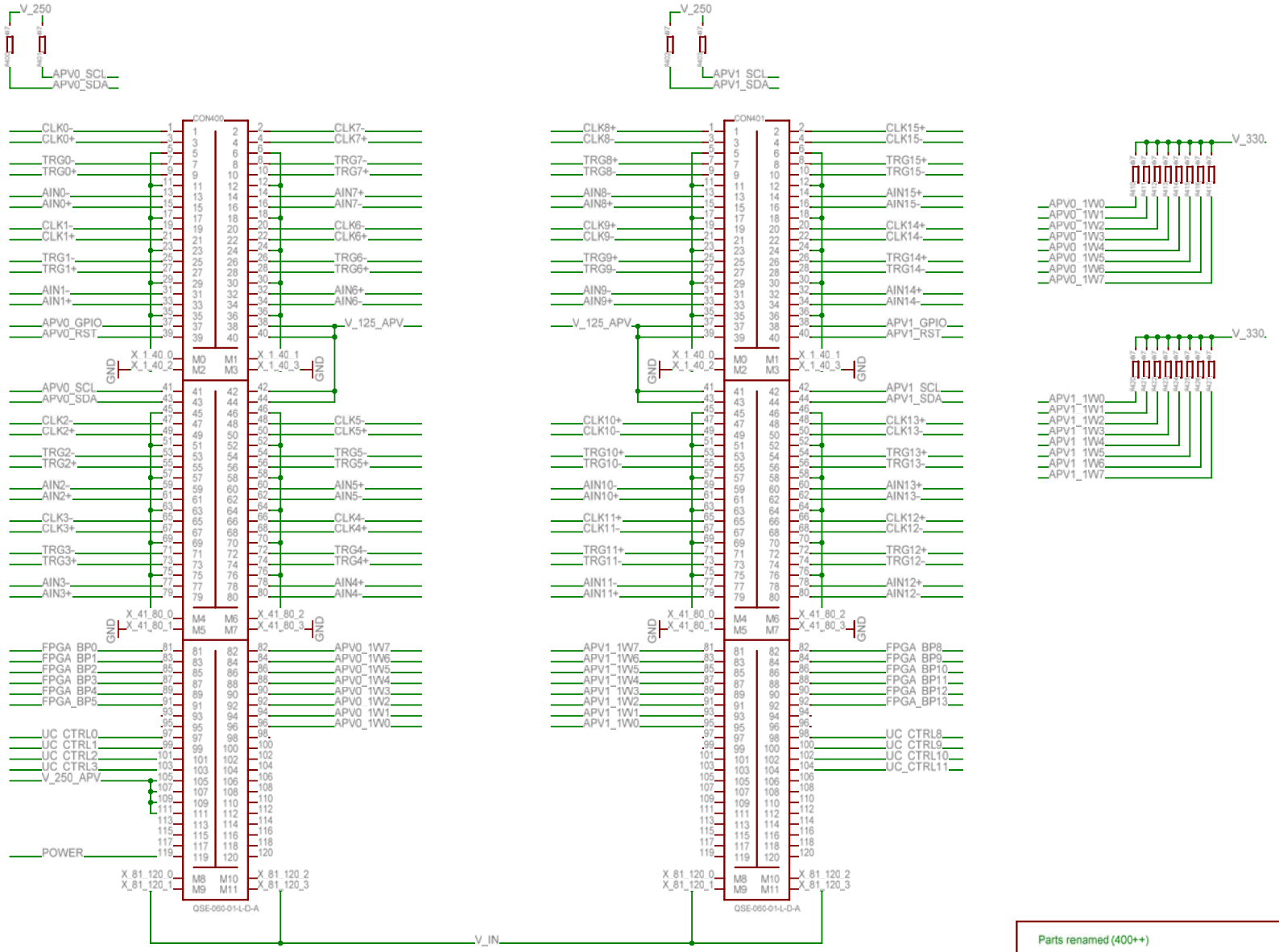

Parts renamed (400++)

Values checked.

TITLE: ETNA_8L_final_D	
Document Number:	REV:
Date: 26.01.2009 15:33:21	Sheet: 4/16

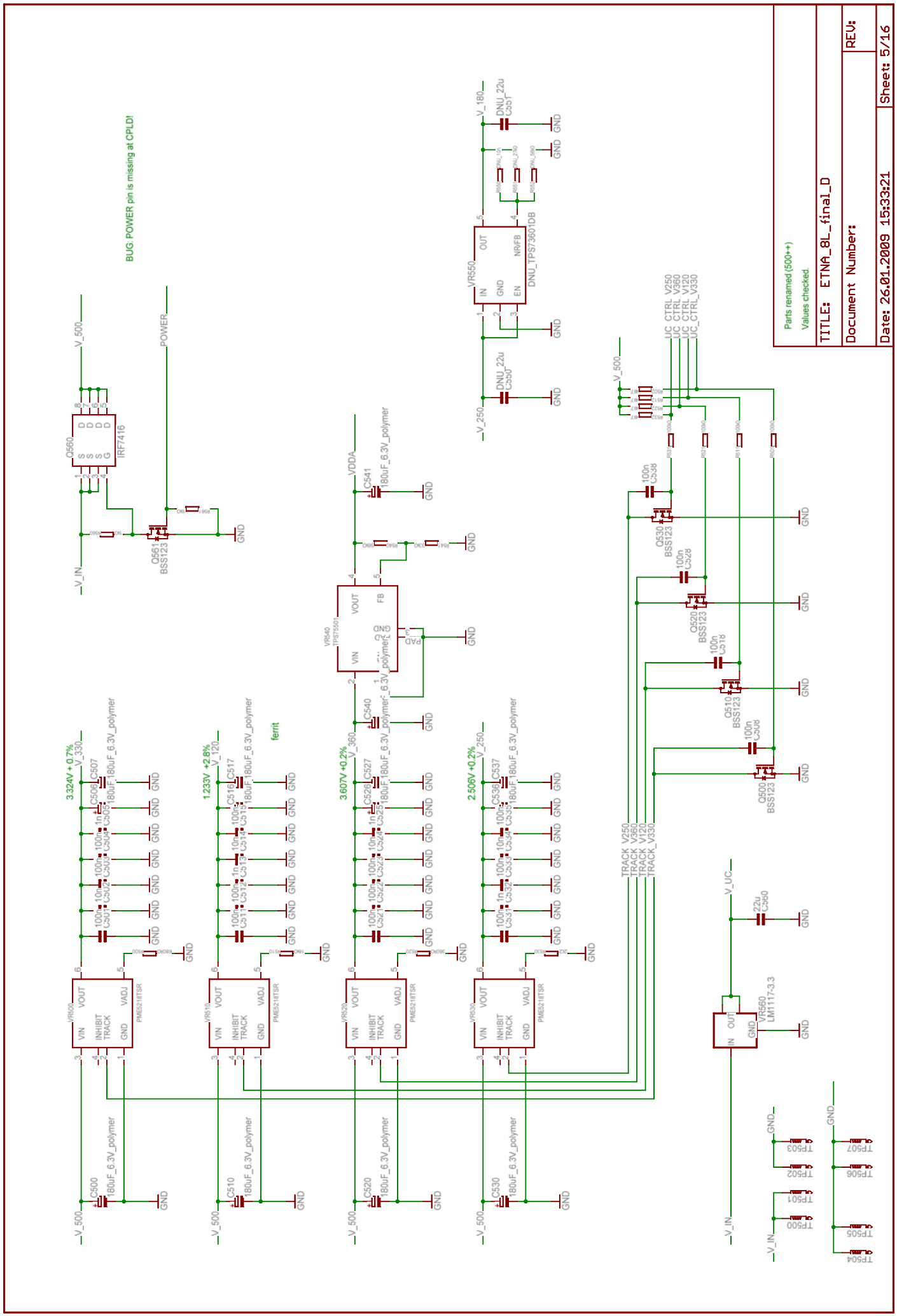
BUG: POWER pin is missing at CPLD!
Parts renamed (500++)
Values checked.
TITLE: ETNA_8L_final_D
Document Number:
REV:
Date: 26.01.2009 15:33:21
Sheet: 5/16
3.324V +0.7%
1.233V +2.8%
3.607V +0.2%
2.506V +0.2%
ferrit
VR550
DNU_TPS73601DB
VR540
TPS71501
VR500
VR510
VR520
VR530
PME2218TSR
VR560
LM1117-3.3
Q560
IRF7416
Q561
BSS123
Q530
Q520
Q510
Q500
POWER
VDDA
TRACK_V250
TRACK_V360
TRACK_V120
TRACK_V330
UC_CTRL_V250
UC_CTRL_V360
UC_CTRL_V120
UC_CTRL_V330

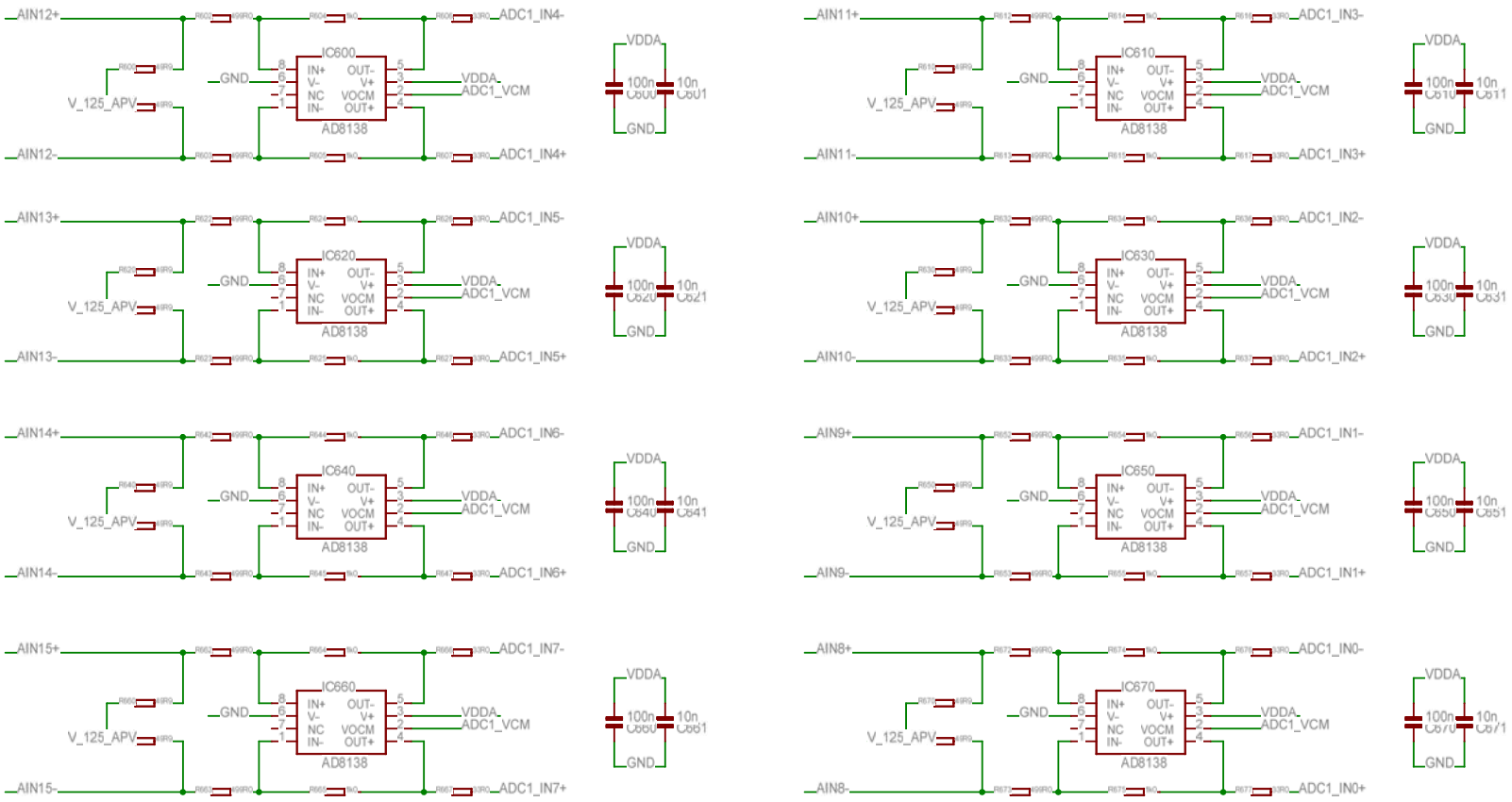

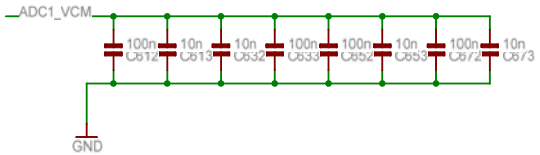

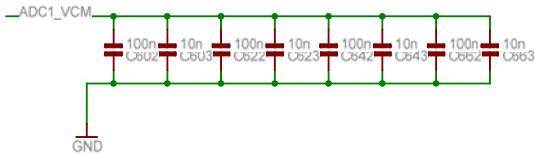

Parts renamed (600++)

Values checked.

TITLE: ETNA_8L_final_D	
Document Number:	REV:
Date: 26.01.2009 15:33:21	Sheet: 6/16

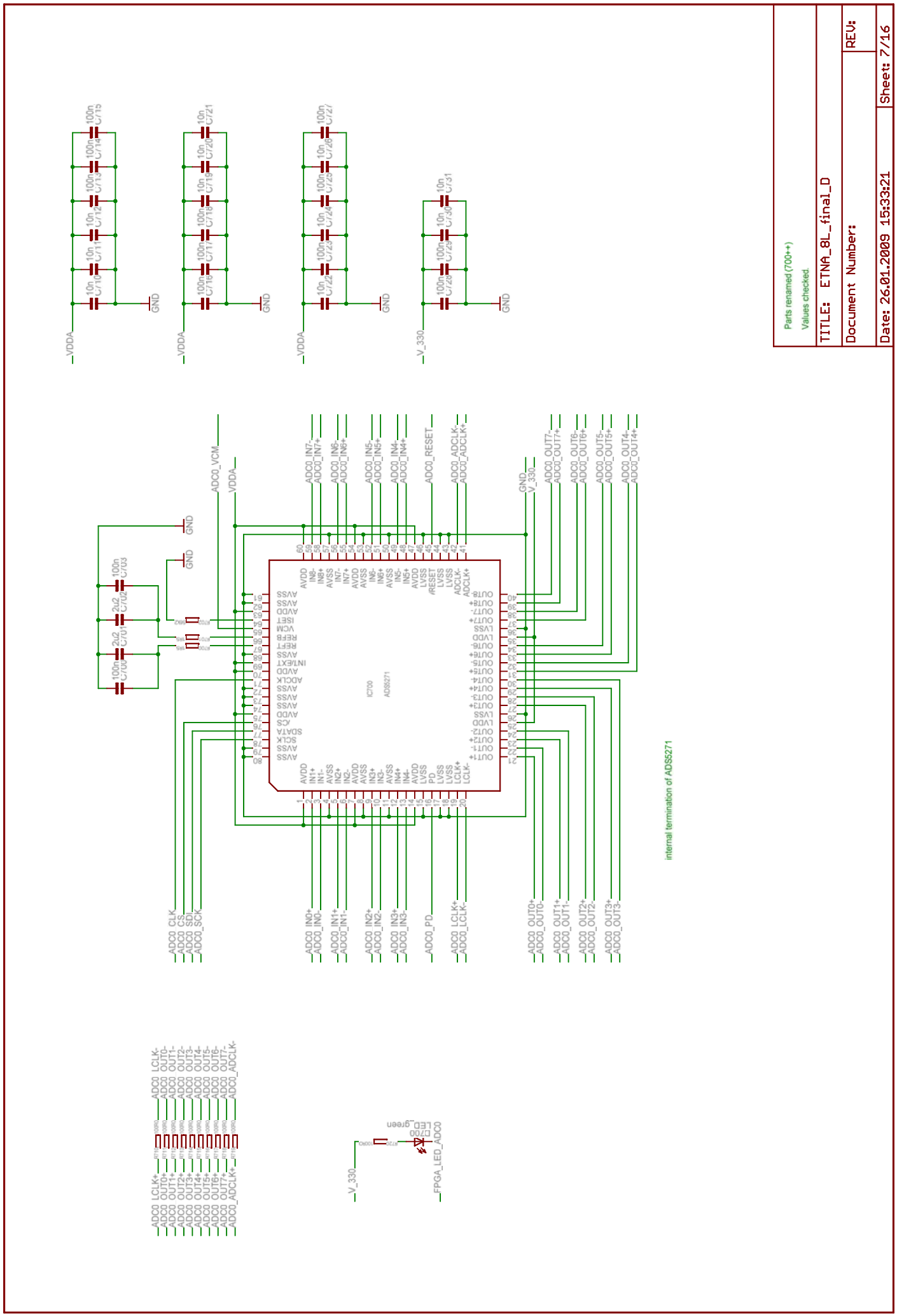
Parts renamed (700++)
Values checked.
TITLE: ETNA_8L_final_D
Document Number:
REV:
Date: 26.01.2009 15:33:21
Sheet: 7/16
internal termination of ADS5271
IC700
ADS5271
VDDA
GND
V_330
ADC0_VCM
ADC0_RESET
ADC0_ADCLK-
ADC0_ADCLK+
ADC0_CLK
ADC0_CS
ADC0_SDI
ADC0_SCK
ADC0_PD
ADC0_LCLK+
ADC0_LCLK-
FPGA_LED_ADC0
LED_green

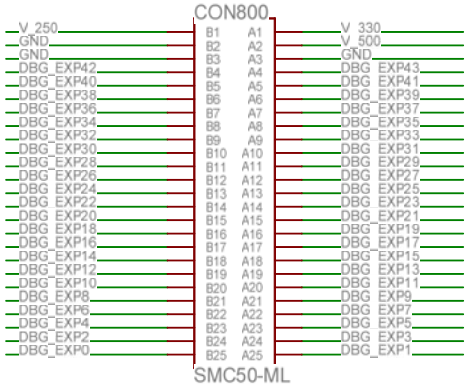

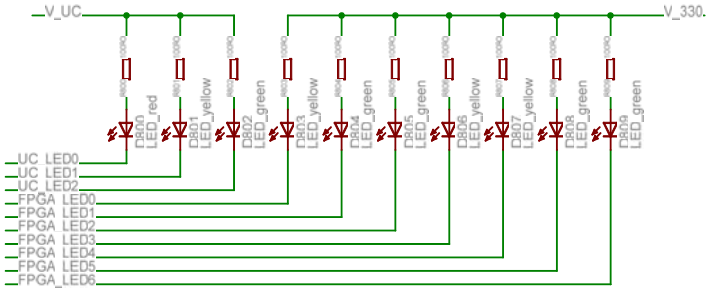

Parts renamed (800++)

Values checked.

TITLE: ETNA_8L_final_D	
Document Number:	REV:
Date: 26.01.2009 15:33:21	Sheet: 8/16

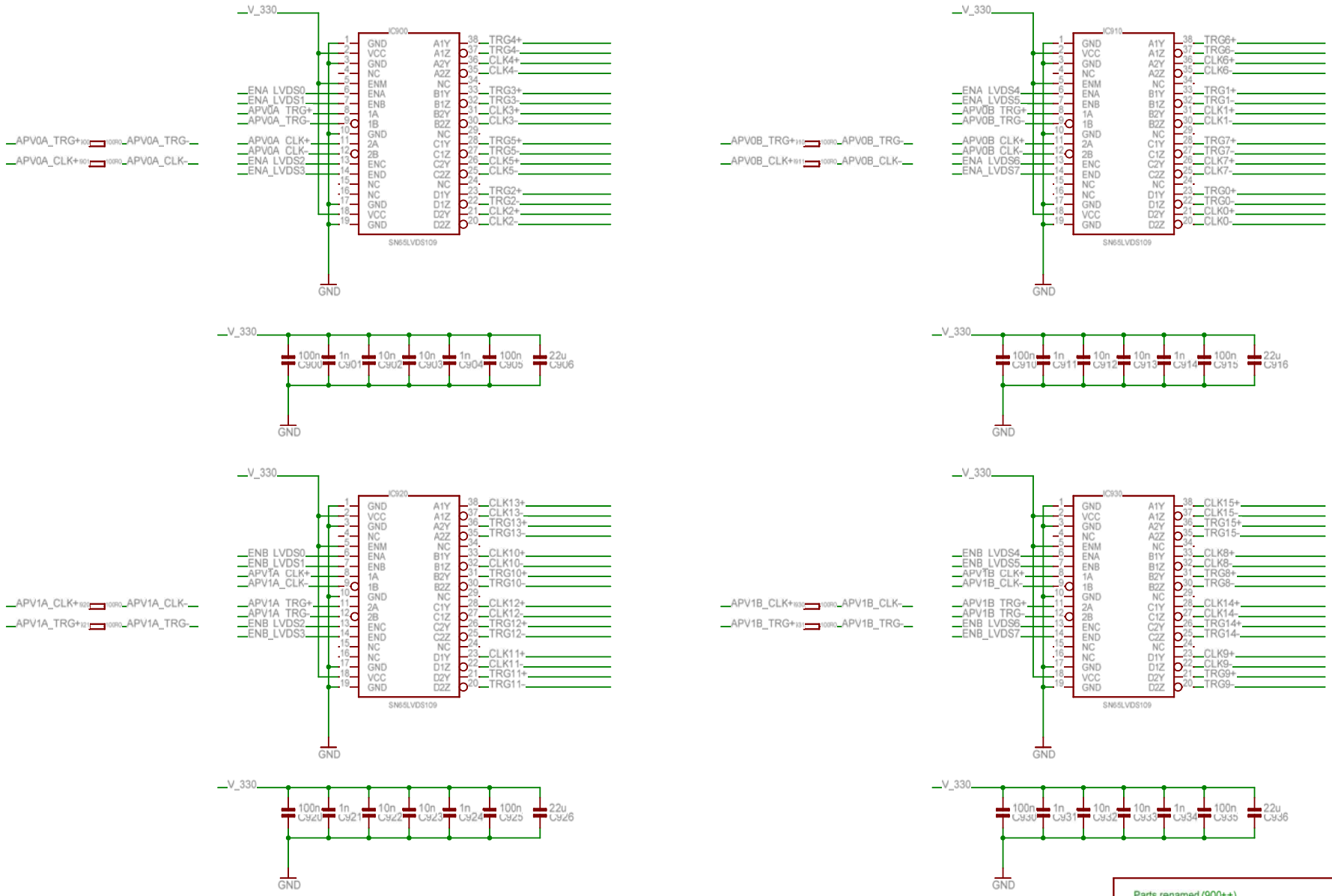

Parts renamed (900++)

Values checked.

TITLE: ETNA_8L_final_D	
Document Number:	REV:
Date: 26.01.2009 15:33:21	Sheet: 9/16

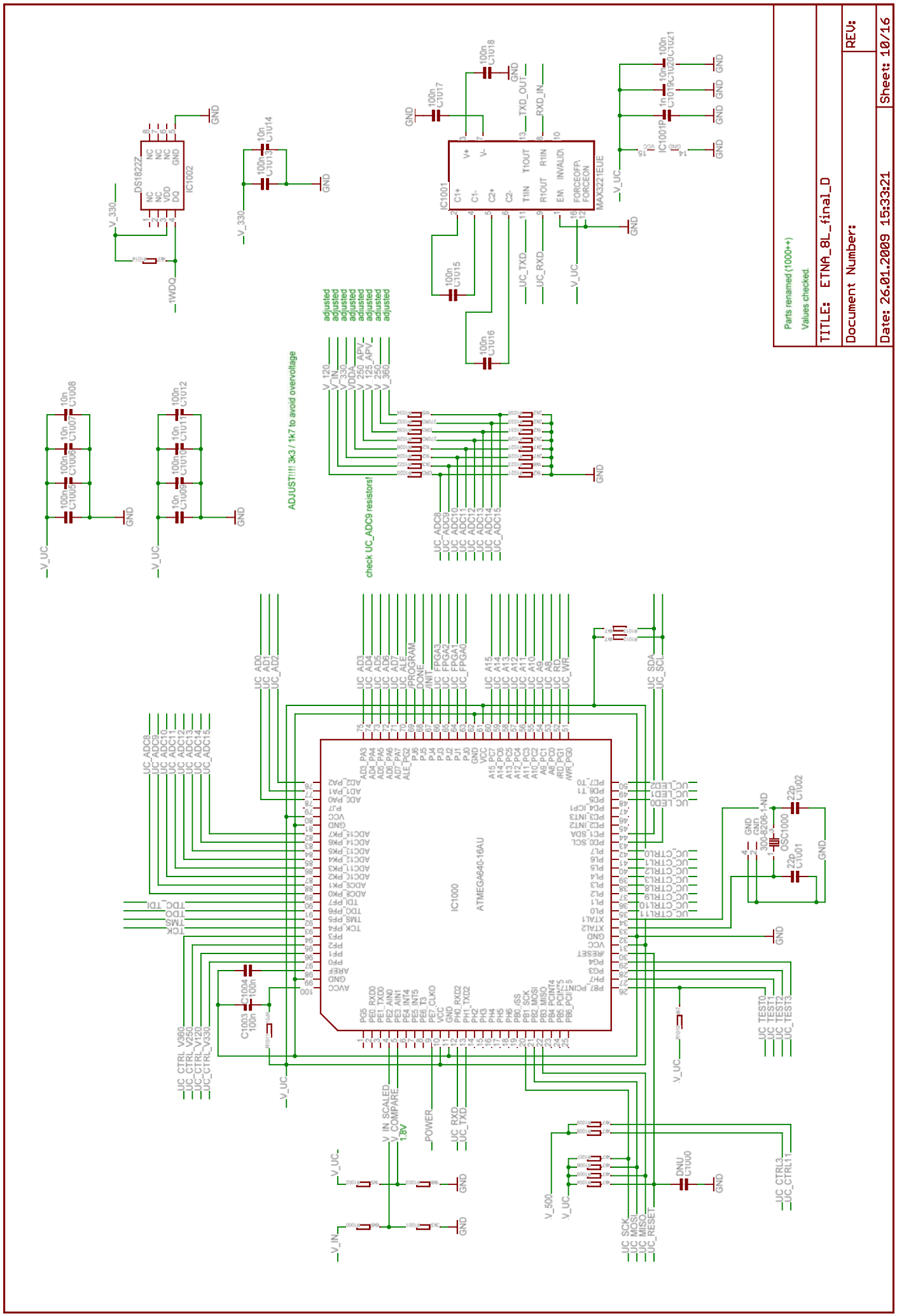

19.06.2009 13:09:51 f=0.70 I:\Eagle_Pro\DTNA\ETNA_8L_final_D.sch (Sheet: 10/16)

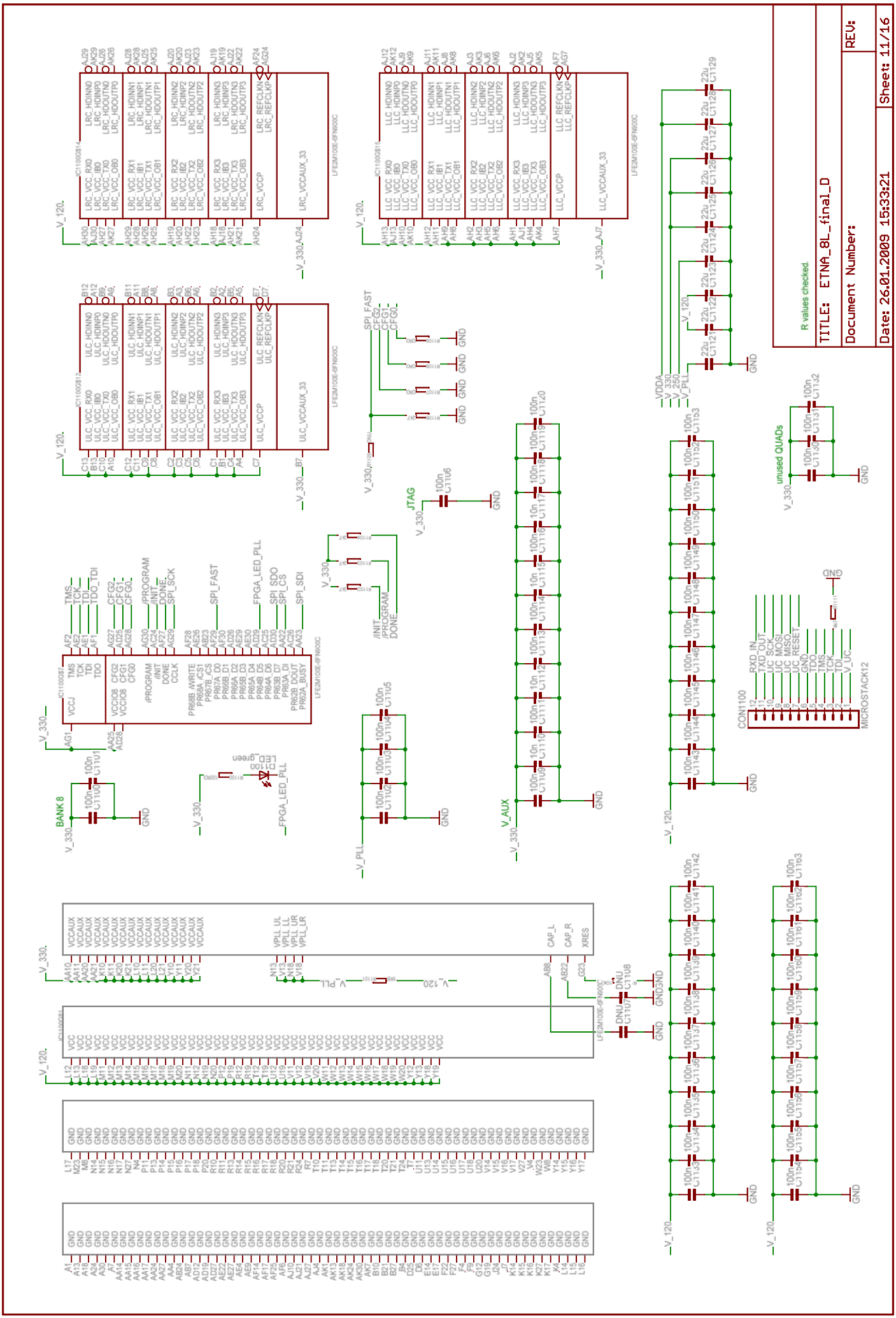

19.06.2009 13:09:51 f=0.70 I:\Eagle_Pro\DTNA\ETNA_8L_final_D.sch (Sheet: 11/16)

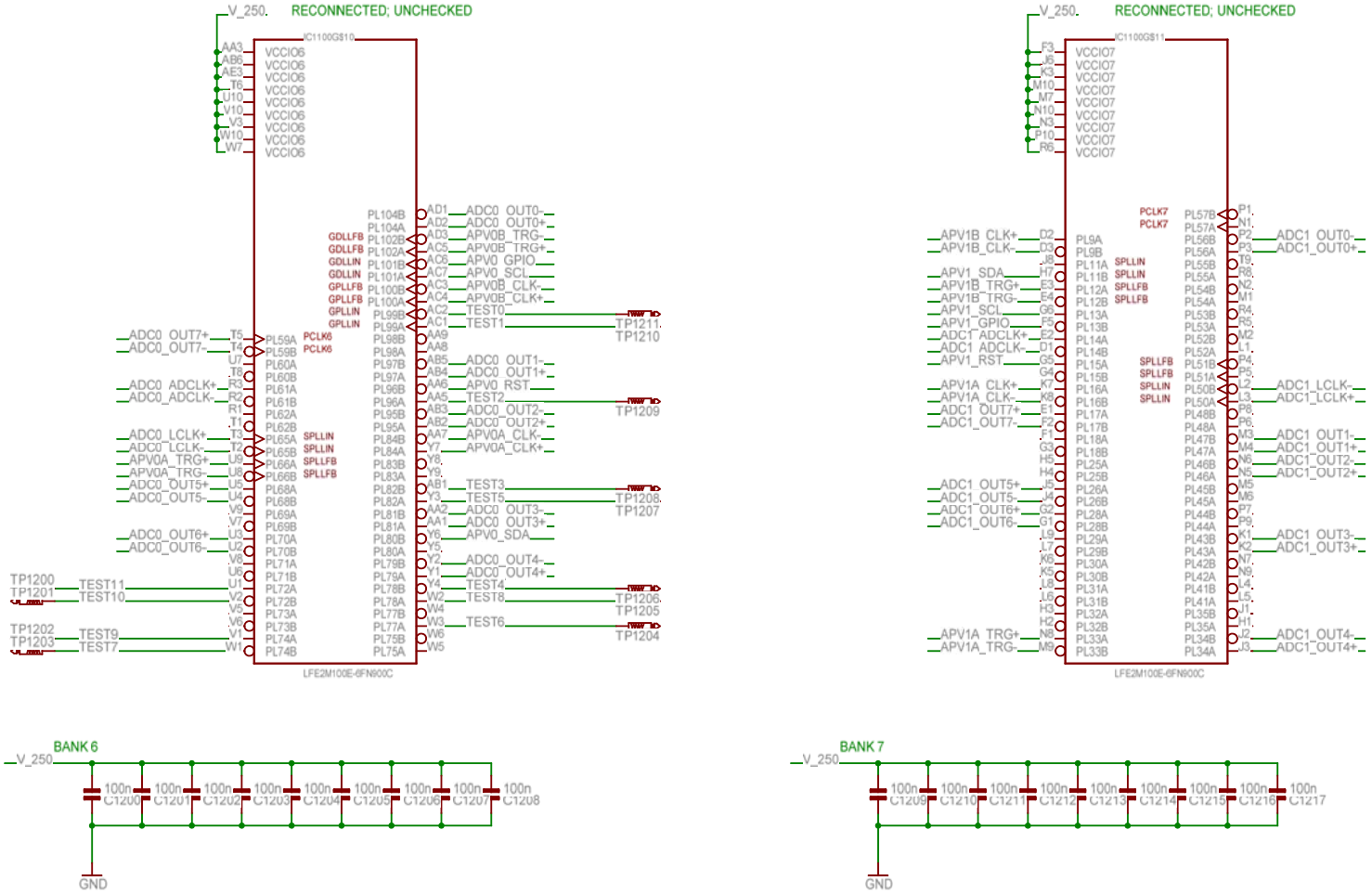

Parts renamed (1200++)

Capacitors reordered.

TITLE: ETNA_8L_final_D	
Document Number:	REV:
Date: 26.01.2009 15:33:21	Sheet: 12/16

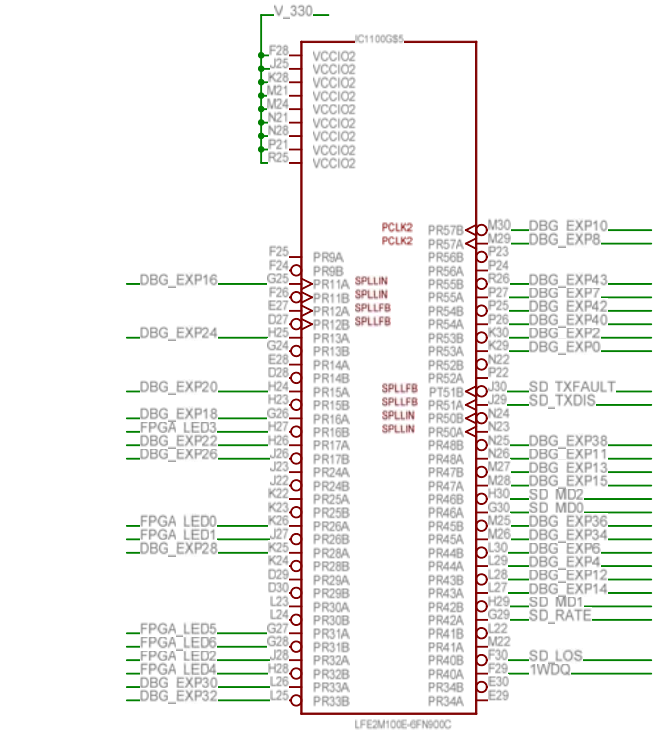

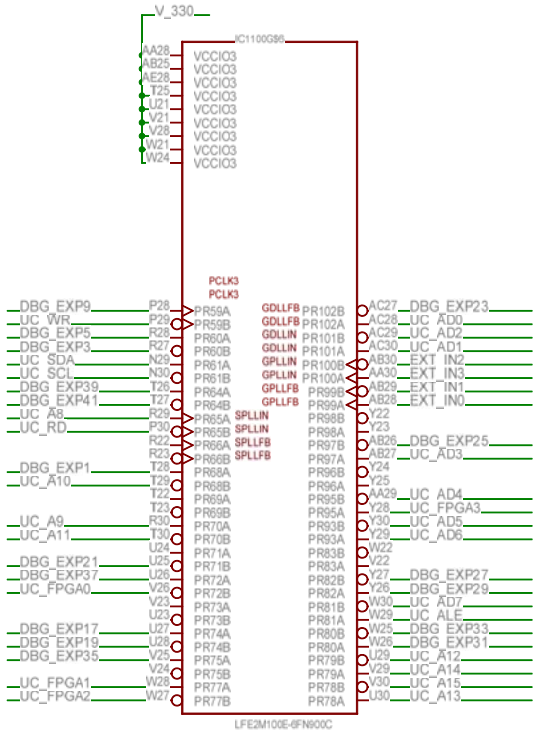

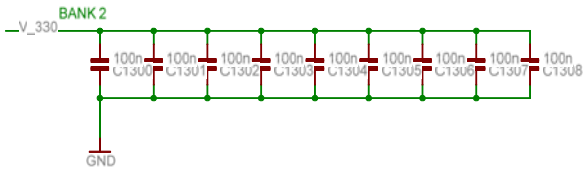

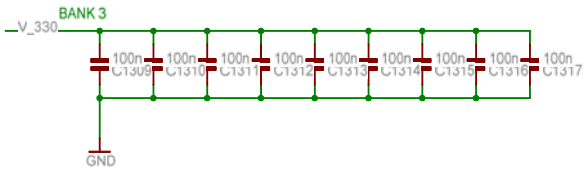

Parts renamed (1300++)

Capacitors reordered.

TITLE: ETNA_8L_final_D	
Document Number:	REV:
Date: 26.01.2009 15:33:21	Sheet: 13/16

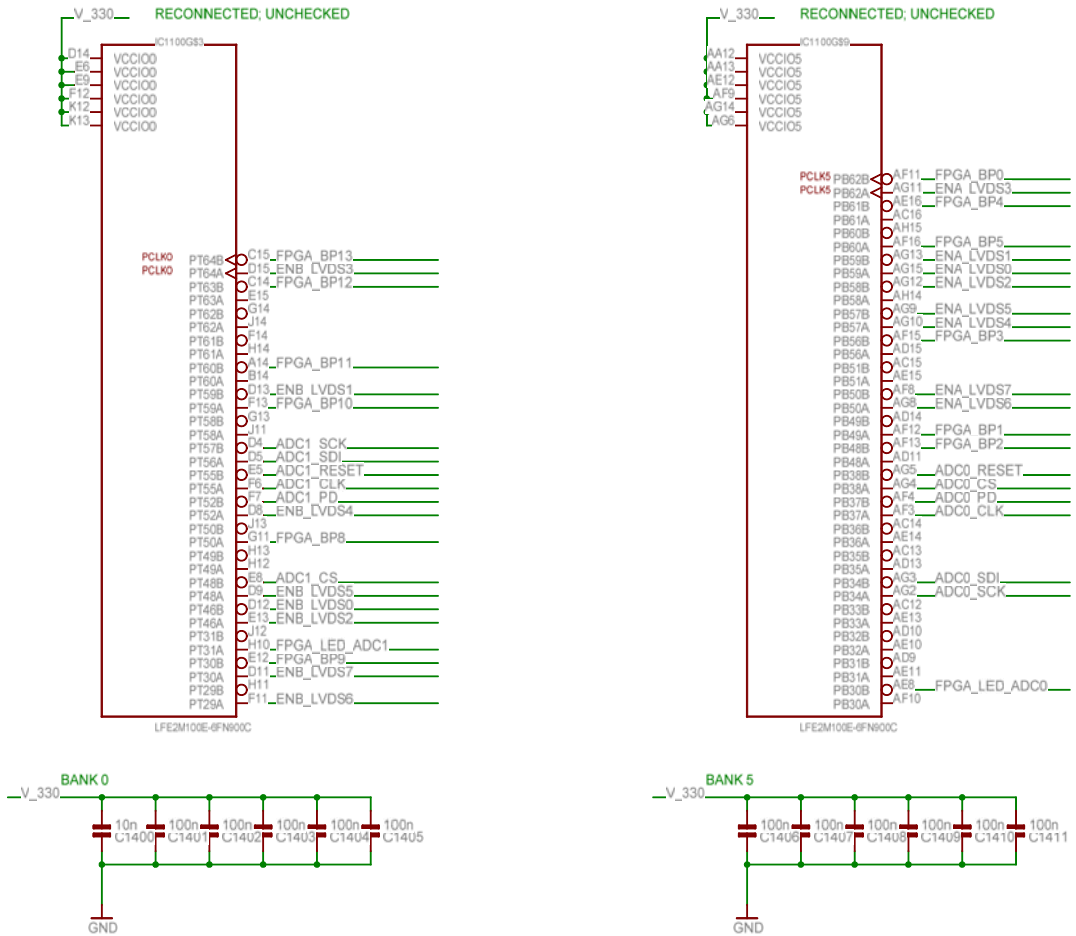

Parts renamed (1400++)

Capacitors reordered.

TITLE: ETNA_8L_final_D	
Document Number:	REV:
Date: 26.01.2009 15:33:21	Sheet: 14/16

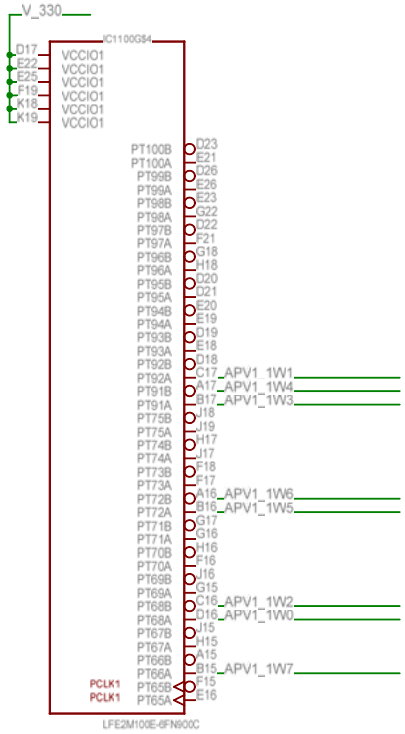

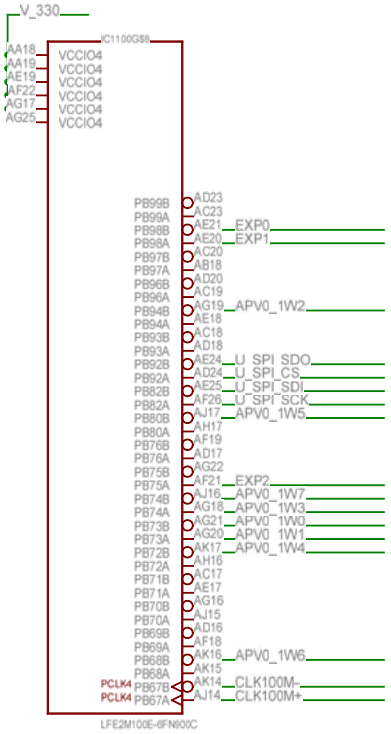

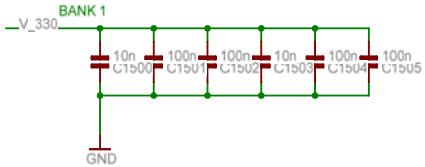

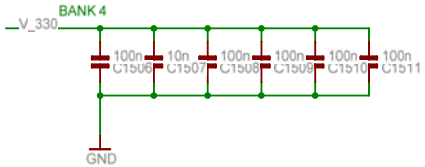

Parts renamed (1500++)

Capacitors reordered.

TITLE: ETNA_8L_final_D	
Document Number:	REV:
Date: 26.01.2009 15:33:21	Sheet: 15/16

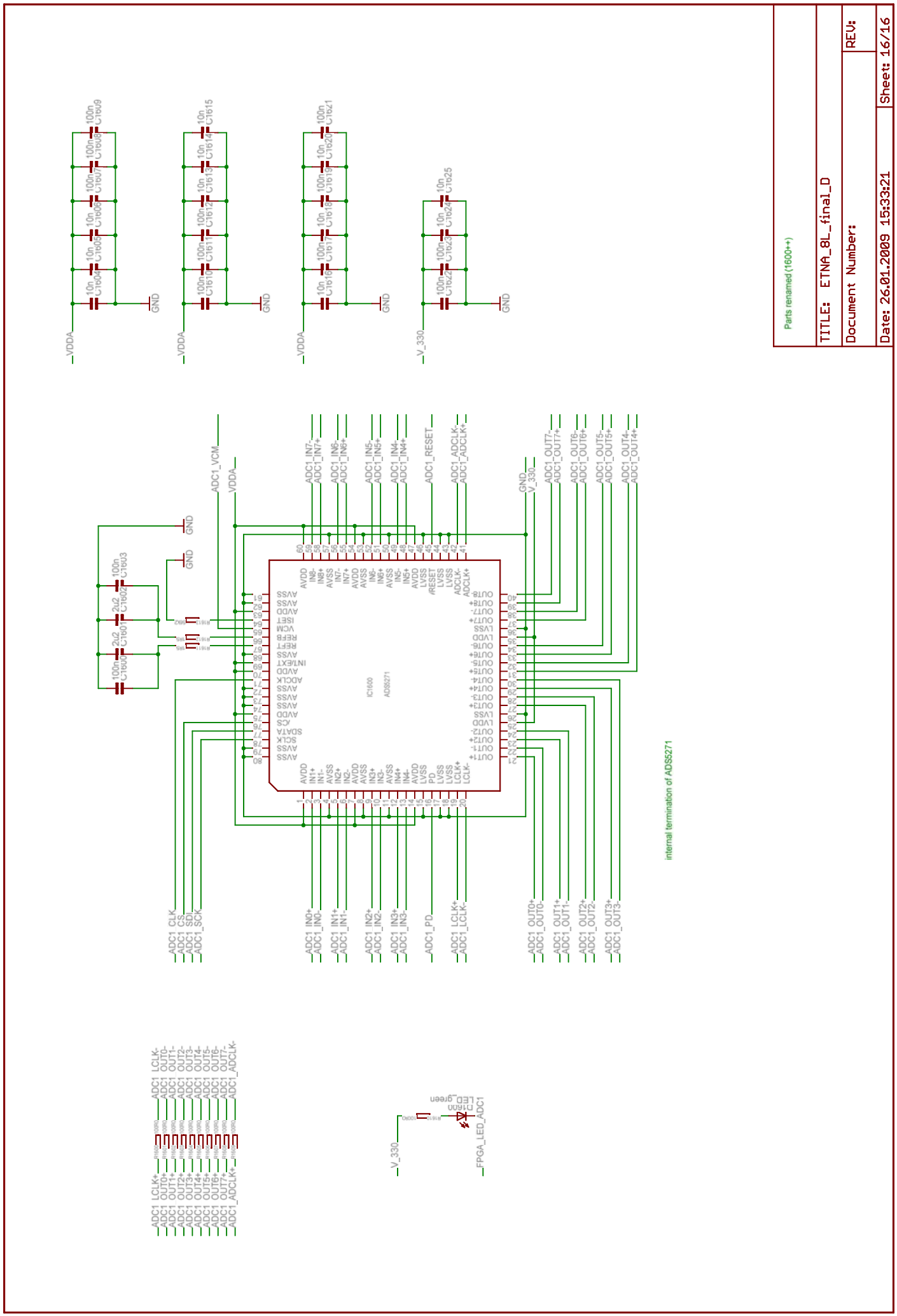
Parts renamed (1600++)
TITLE: ETNA_8L_final_D
Document Number:
REV:
Date: 26.01.2009 15:33:21
Sheet: 16/16
internal termination of ADS5271
IC1600
ADS5271
D1600
LED_green
FPGA_LED_ADC1
V_330
VDDA
GND
ADC1_VCM
ADC1_RESET
ADC1_ADCLK-
ADC1_ADCLK+
ADC1_CLK
ADC1_CS
ADC1_SDI
ADC1_SCK
ADC1_PD
ADC1_LCLK+
ADC1_LCLK-