Cooling of the pion beam tracker

Vacuum operation

Thermal runaway: I ↑ → P↑ → T↑

- Demand of the detctor: leakage current × depletion voltage
  - $I \cdot U = 2\ \mu A\ \cdot 110\ V = 220\ \mu W$
- Particle flux:
  - $10^8\ \frac{particles}{s} \cdot 10 MeV = 160\ \mu W$
- Heating through cables
  - $\Phi = \lambda \cdot \frac{A}{d} \cdot (T_1 - T_2)$
  - *Number of cables/strips: 2*128*
  - *d ≈ 50*µm, *l ≈ 0.5*m, *ΔT*$_{max}$ *= 40*K
  - $\Phi = 0.061\mathrm{W}$

→ Heating through cables is dominant

Cooling capacity of the chiller:

°C	20	0	-10	-20
kW	0.26	0.21	0.15	0.05

Radiation damage

Thermal runaway: $I \uparrow \rightarrow P \uparrow \rightarrow T \uparrow \rightarrow I \uparrow$ ...

$noise \propto \sqrt{I}$ detection of MIPs

$$\kappa = \frac{D_i(E)}{D_n(1MeV)} \quad , D_n(1MeV) = 95\ MeVmb$$

$$\Delta I = d \cdot \alpha \cdot N_{eq}$$

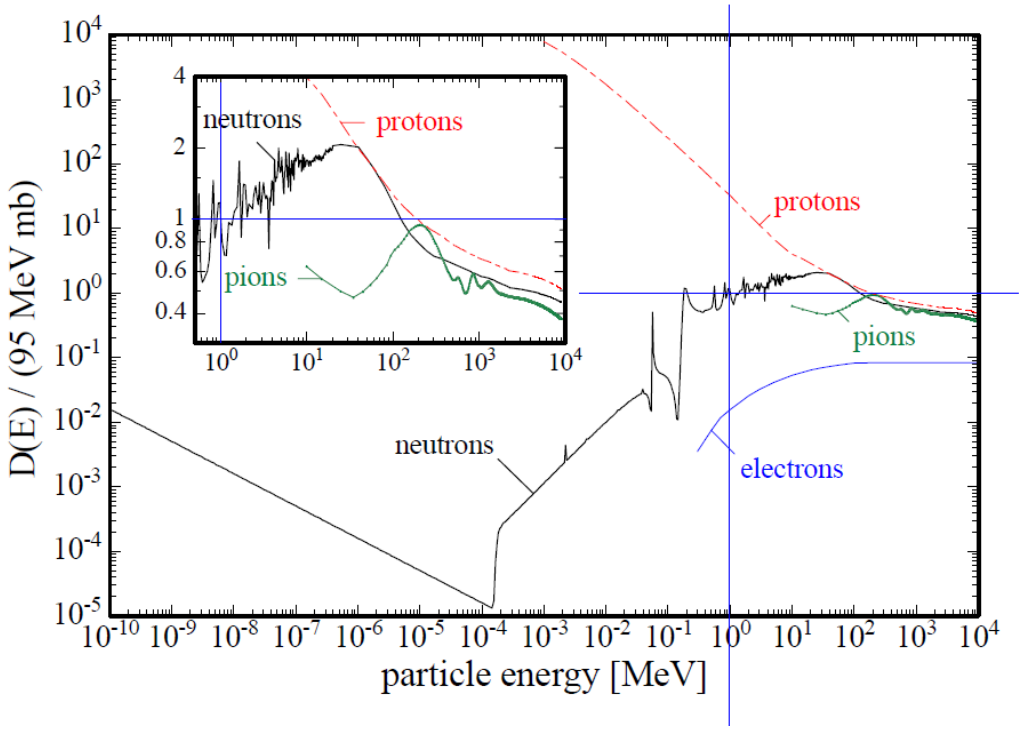

π at 1GeV: κ ≈ 0.5

p at 1GeV: κ ≈ 0.7

Radiation damage

Thermal runaway: $I \uparrow \rightarrow P \uparrow \rightarrow T \uparrow \rightarrow I \uparrow$ ...

$noise \propto \sqrt{I}$ detection of MIPs

$$\Delta I = d \cdot \alpha(T) \cdot N_{eq}$$

Beamtime: 25d at 25°C (α(25°C) ≈ 10^{-16} A/cm)

- First detector (near production target):
  - p, π, .. : $1 \cdot 10^8 \frac{particles}{s}$
  - $N_{eq} = \kappa \cdot N_{tot} = \kappa \cdot N \cdot t = 0.7 \cdot 1 \cdot 10^8 \cdot 2160000 \approx 1.4 \cdot 10^{14}$
  - $\Delta I \approx 300\mu m \cdot 1 \cdot 10^{-16} \cdot 1.4 \cdot 10^{14} \approx 420\mu A$

- Second detector (near HADES target):
  - π: $1 \cdot 10^6 \frac{particles}{s}$
  - $N_{eq} = \kappa \cdot N_{tot} = \kappa \cdot N \cdot t = 0.5 \cdot 1 \cdot 10^6 \cdot 2160000 \approx 1 \cdot 10^{12}$
  - $\Delta I \approx 300\mu m \cdot 1 \cdot 10^{-16} \cdot 1 \cdot 10^{12} \approx 3\mu A$

→ α(T) has to be reduced → cooling down to -10°C

Prototype setup

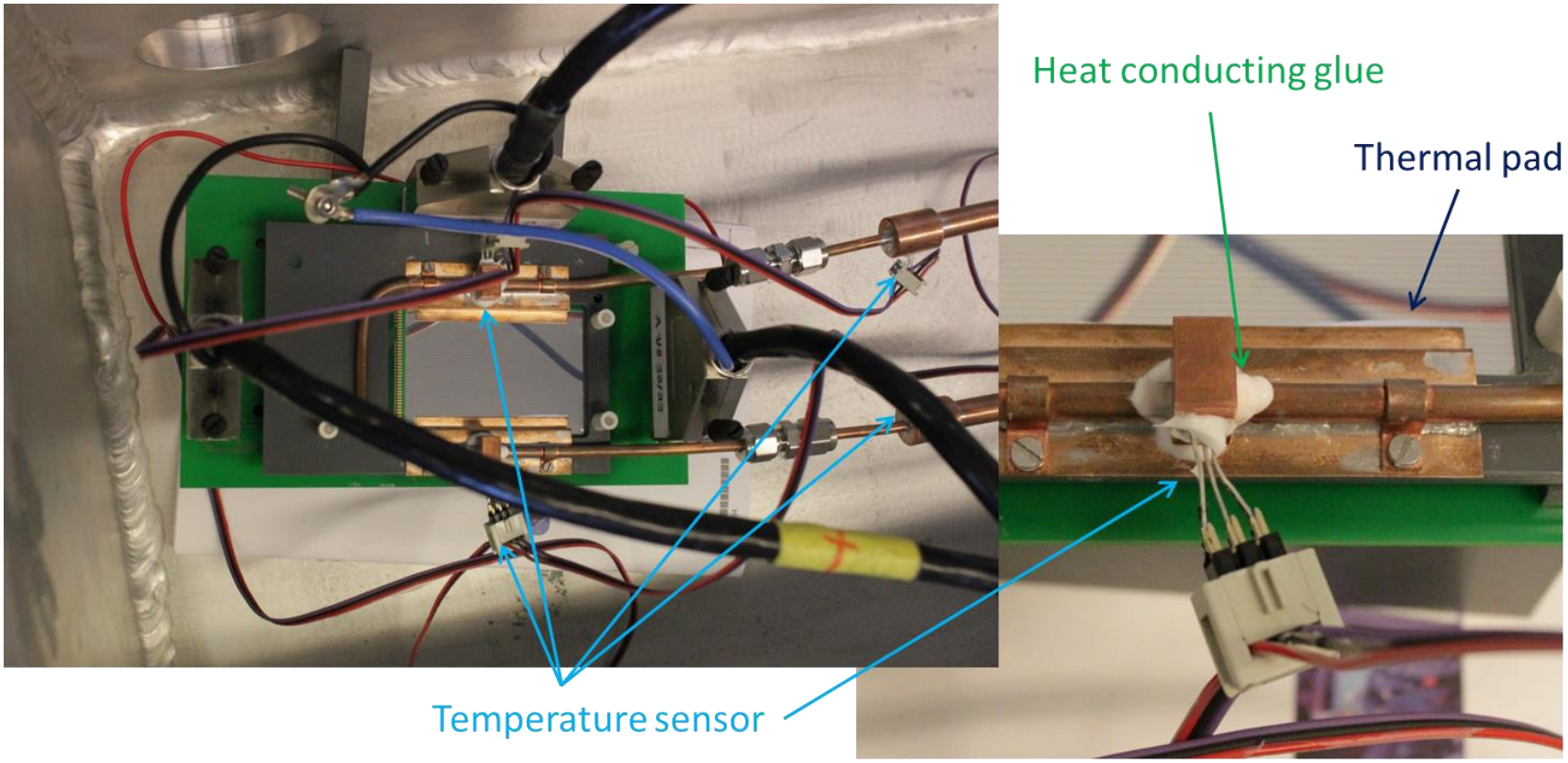

Detector read-out

with cooling device attached

Before the cooling was attached

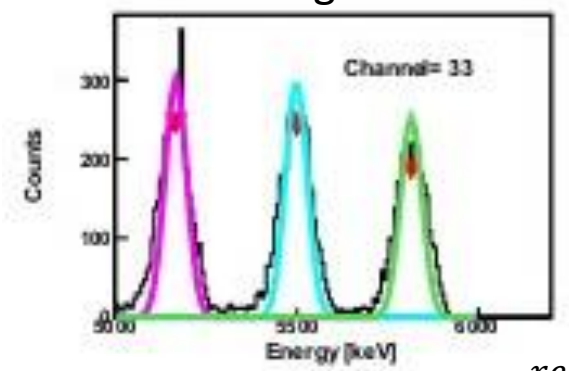

After the cooling was attached

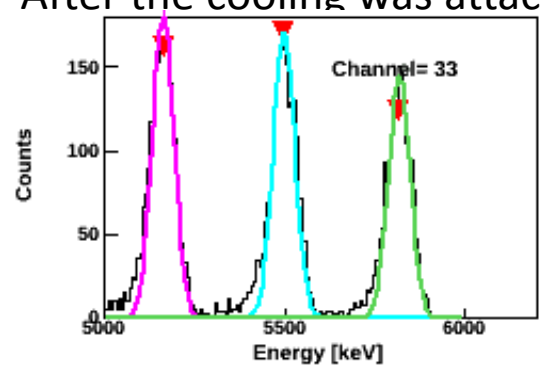

$resolution \sim 228.6keV$

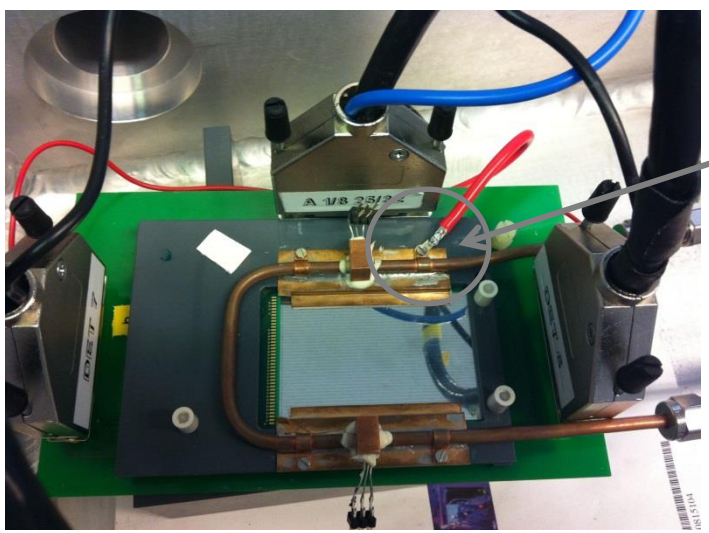

- The cooling device is on the detector ground
- Thermal pads which do not alternate the dectector function

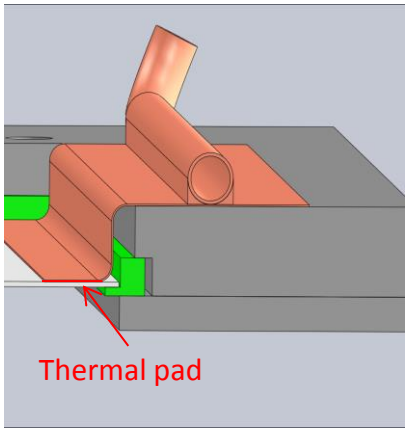

Temperature measurements

Improved attache of PT100

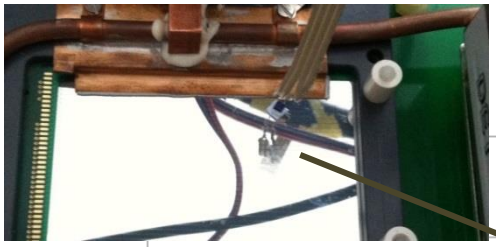

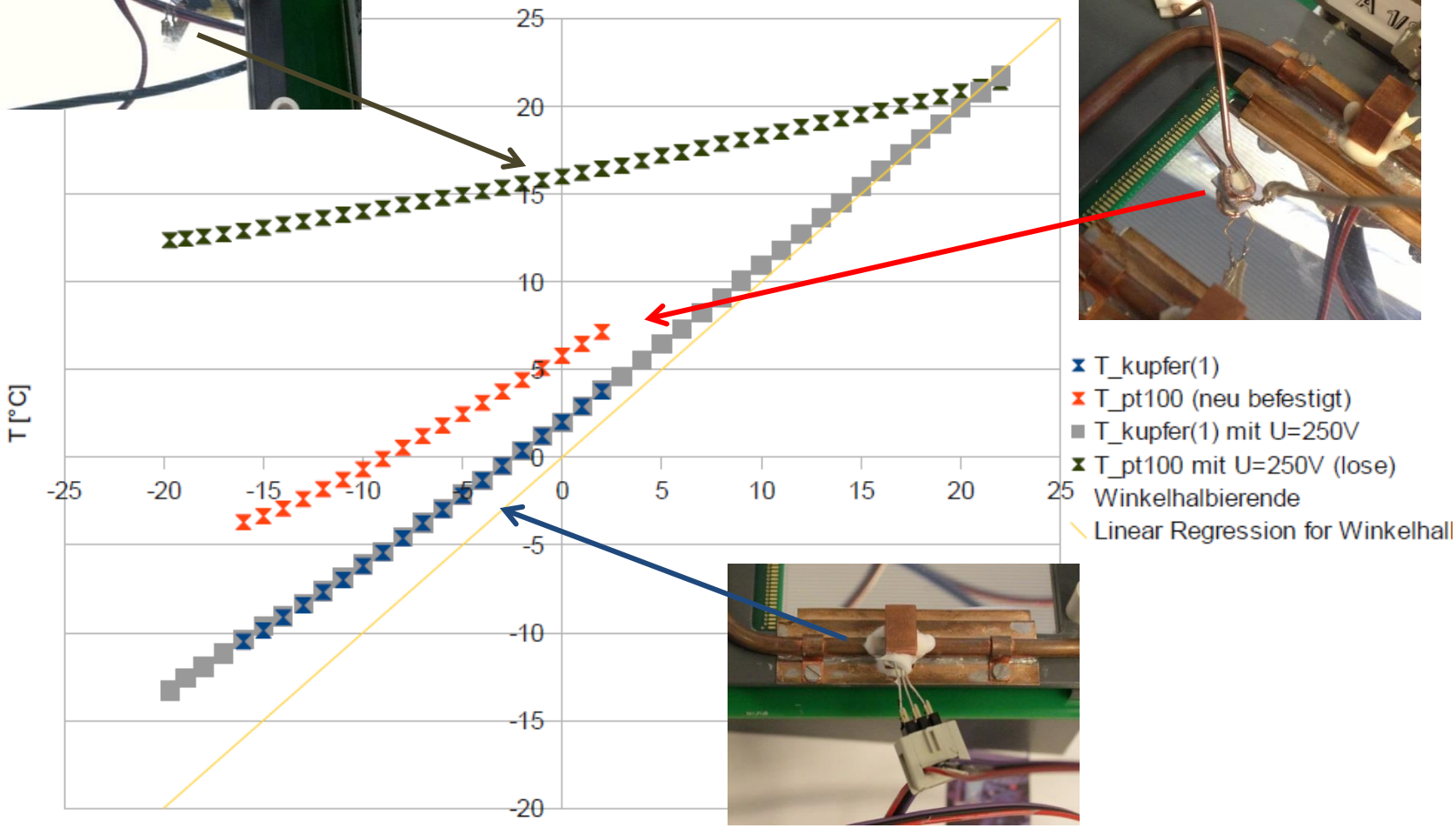

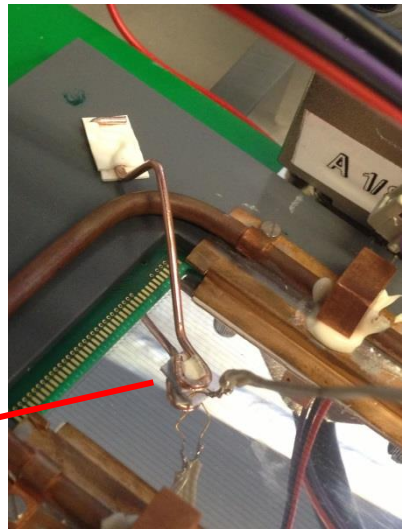

Temperature measurements

Influence leakage current + depletion voltage

$(250\ V \cdot 2.35\ \mu A = 588\ \mu W, \qquad pion\ tracker: 220\ \mu W)$

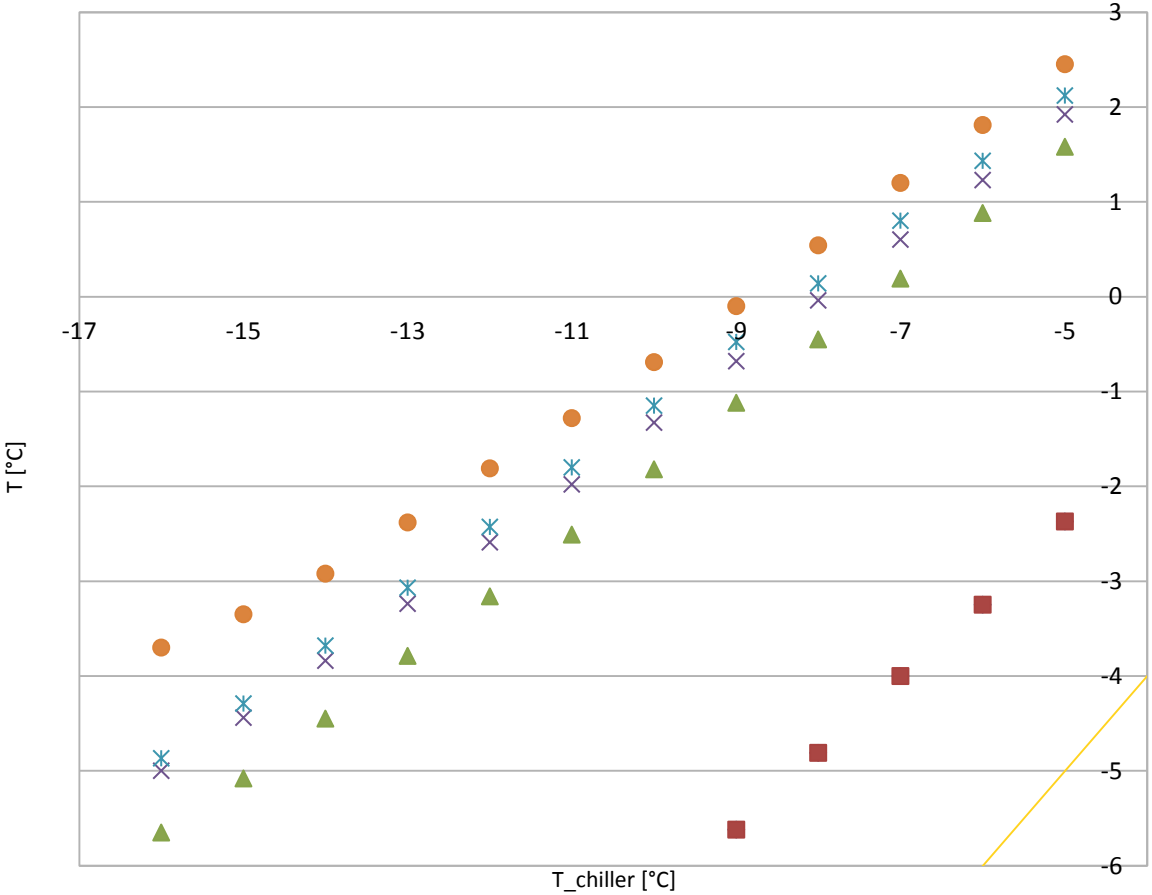

× T_pt100 (with cables)

✳ T_pt100 (with cables + voltage)

→ lekage current has no big influence !!!!

Temperature measurements

With and without connected cables

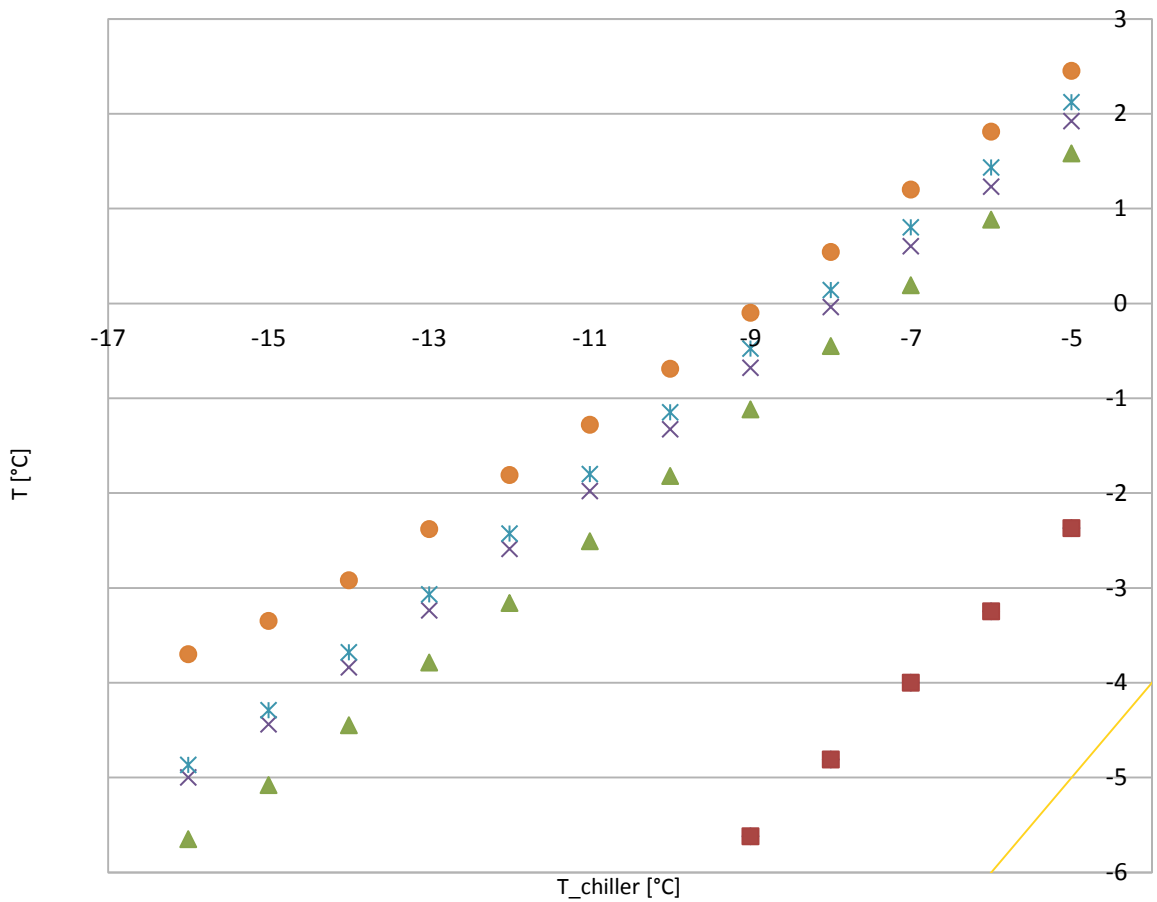

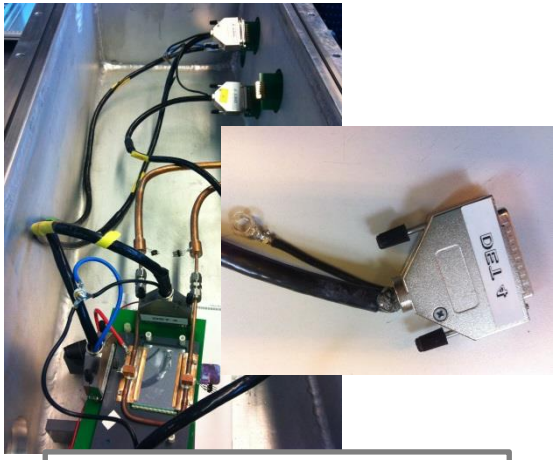

▲ T_pt100 (without cables)
× T_pt100 (with cables)

$\Phi \approx 0.9$ W

(*d ≈ 0.25* cm, *l ≈ 1* m, *3 cables*)
(*tracker: 0.061* W)

→ ΔT ≈ 0.5 - 1°C
→ small influence

Leakage current

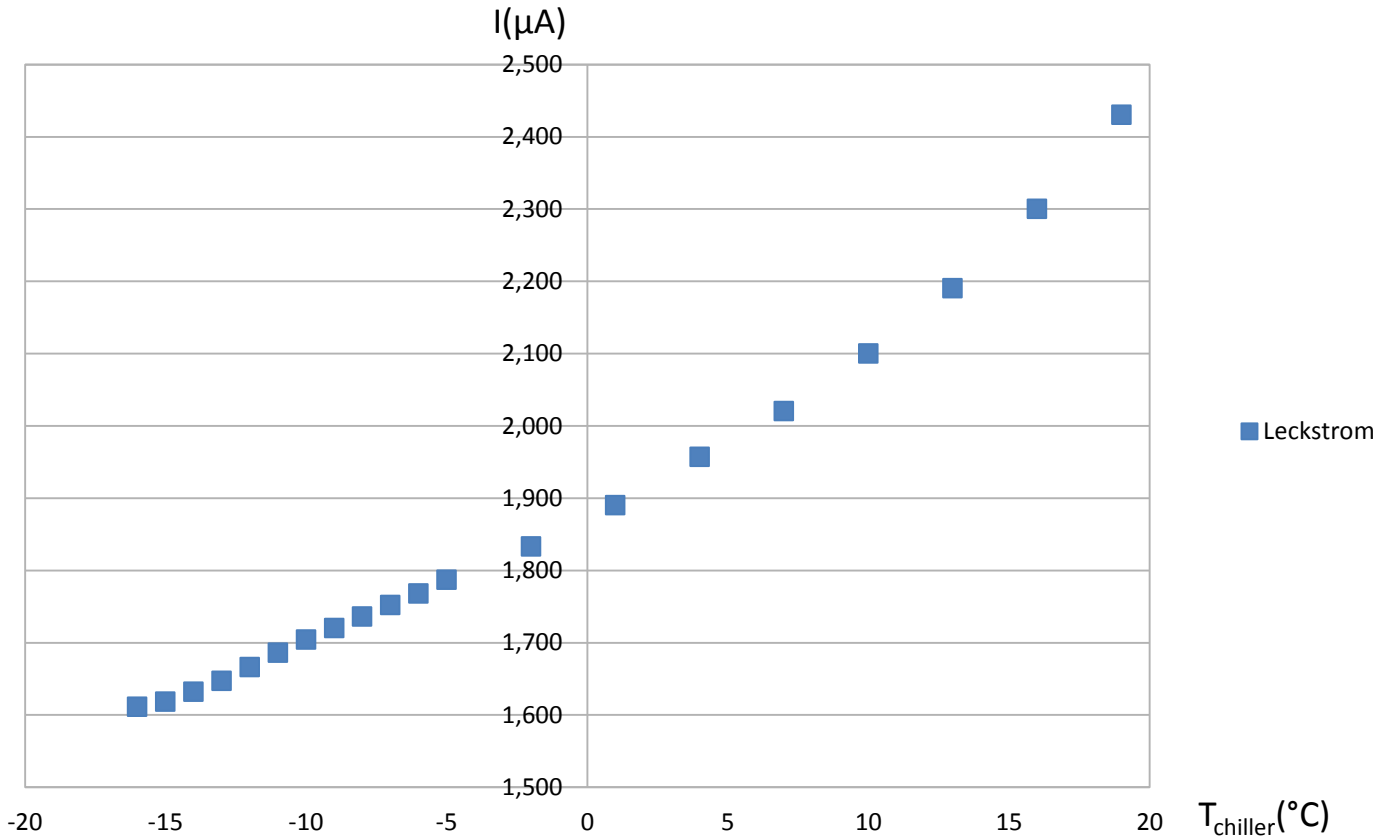

Day and night measurement

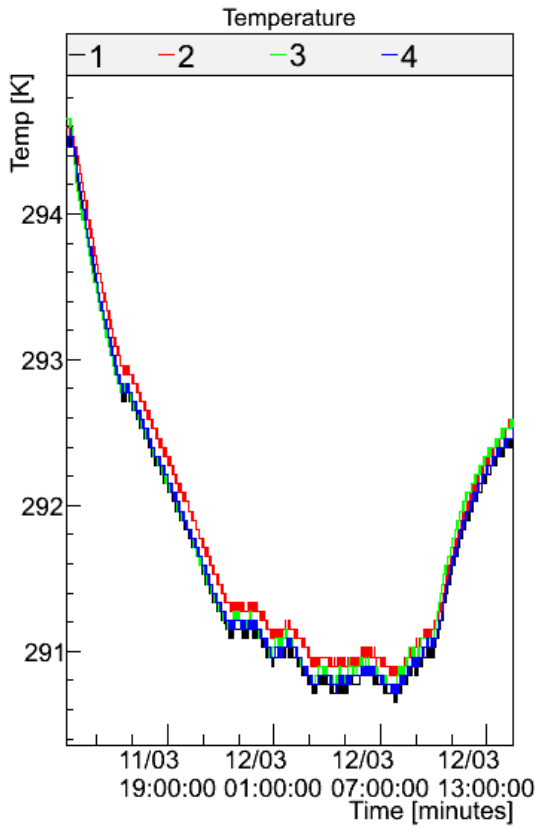

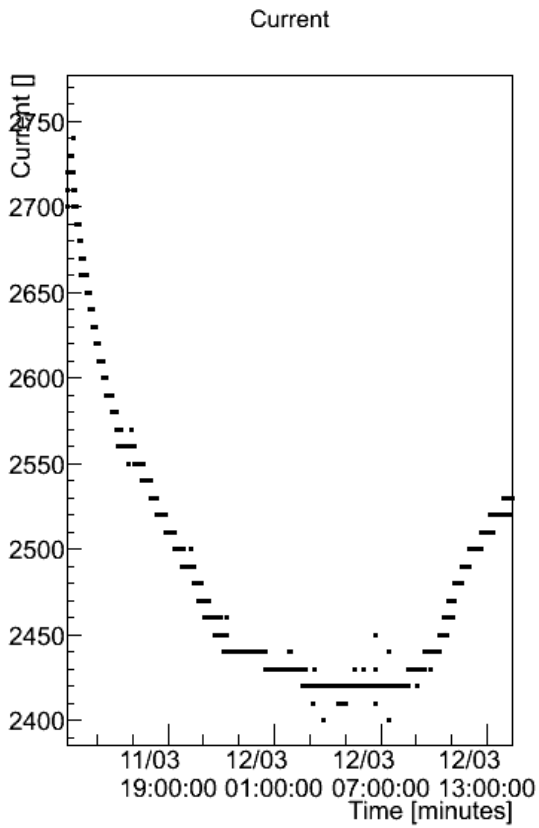

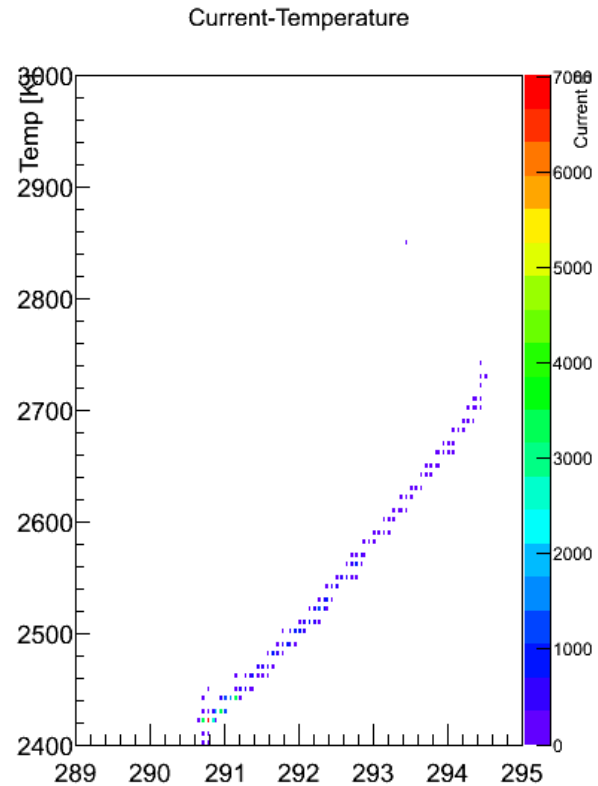

Outlook

Possible improvements

- Improve the heat contact between the copper plates and silicon

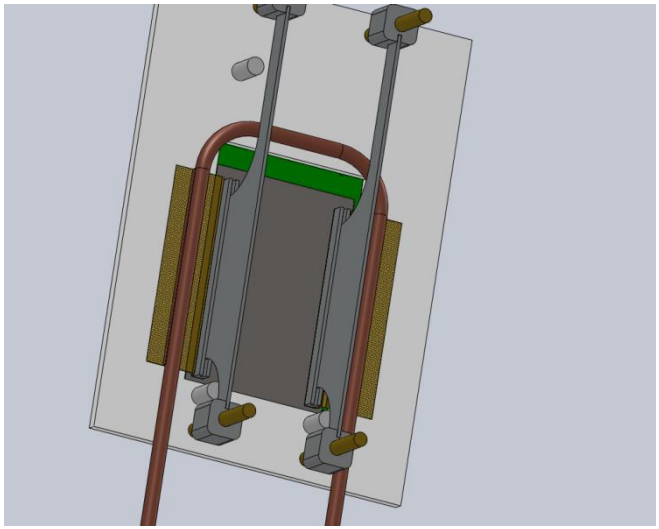

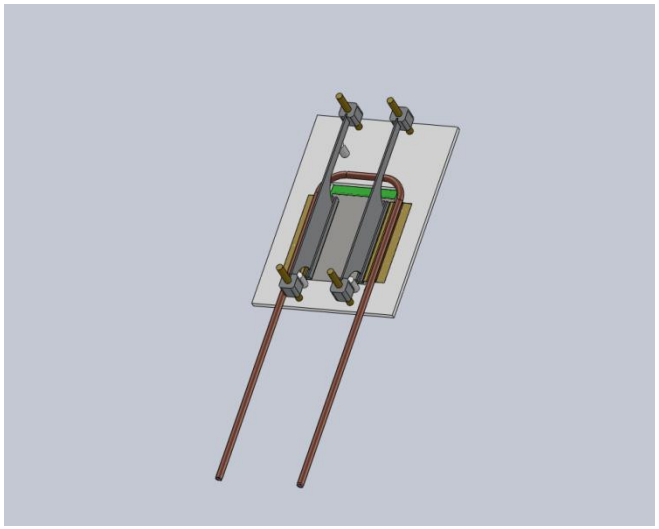

- Improve of connection between chiller and chamber
- New thermal pads with better heat conductivity
  - At the moment : 1 W/(mK)

Outlook

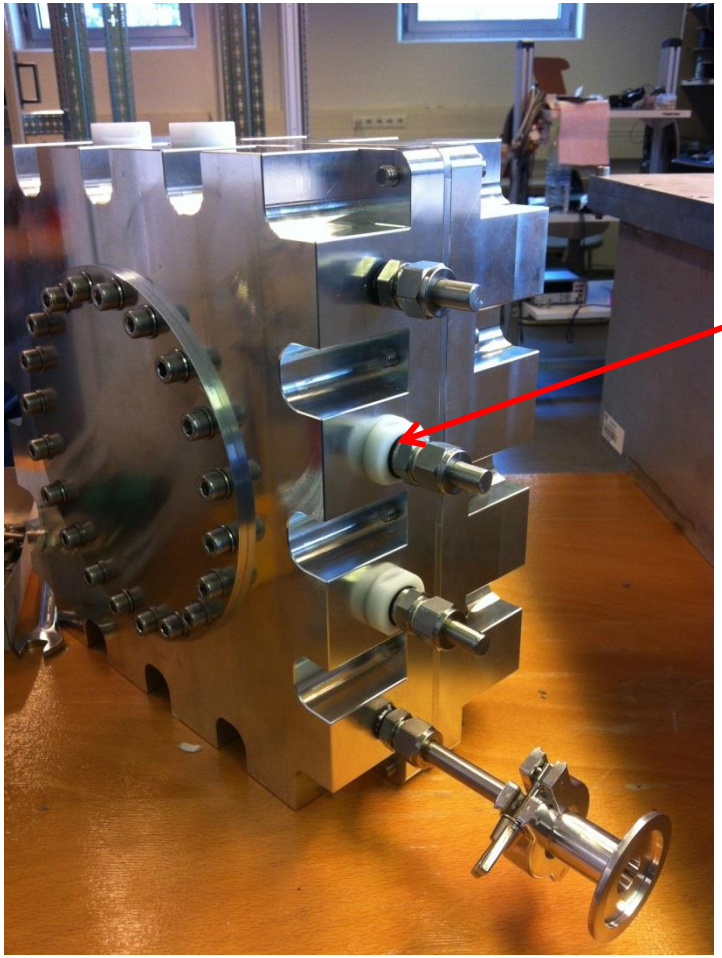

Test, if the plastic isolation does not shrink to much during cooling

Backup

Noise

comparison: -2.5°C with 23°C

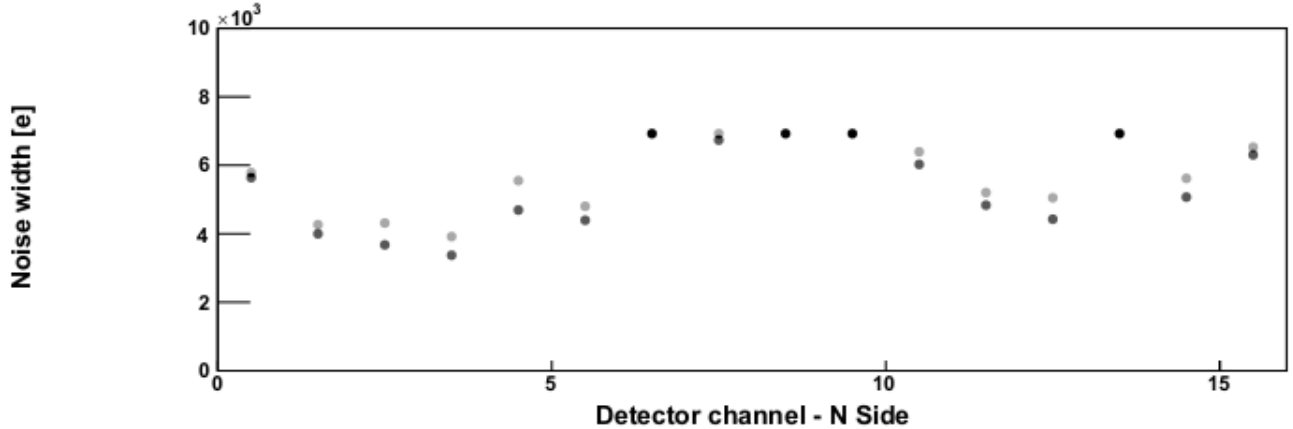

black: -2.5°C
gray: 23°C